EMSS-32R1
mSATA to Dual SATA III RAID Module

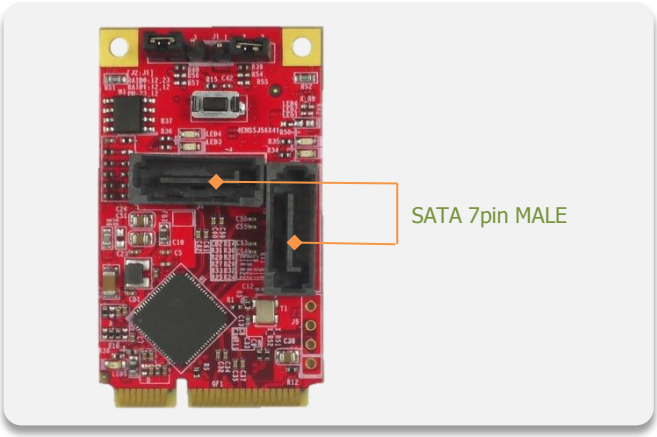

Features

- Supports mSATA to dual SATA III by Port Multiplier.
- Supports H/W RAID 0/1 over SATA.
- 30μ golden finger, 3 years warranty.
- Industrial design, manufactured in innodisk Taiwan

Mechanical Drawing

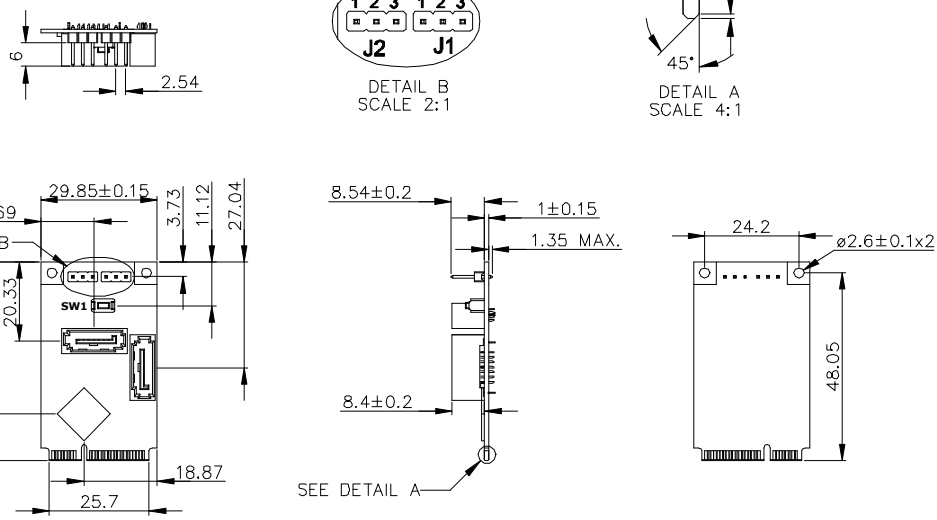

Specifications

Form-Factor	mSATA
Input I/F	SATA III
Output I/F	SATA III
Output Connector	SATA 7pin x 2
Max TDP	1.65W (3.3V x 498mA)
Dimension (WxLxH)	29.85 x 50.8 x 10.8 mm, Weight: 7g
Temperature	Operation: STD: 0˚C ~ +70˚C Storage: -55˚C ~ +95˚C
Environment	Vibration: 5G @7~2000Hz, Shock: 50G @ 0.5ms
Notes	1. RAID Mode Setting: [J2:J1] RAID0: 12:23, RAID1: 12:12, PM: 23:12 2. Press tact switch SW1 for reset.

Headquarters (Taiwan)
5F., No. 237, Sec. 1, Datong Rd., Xizhi Dist., New Taipei City 221, Taiwan
Tel: +886-2-77033000
Email: sales@innodisk.com

Branch Offices:
USA
usasales@innodisk.com
+1-510-770-9421
Europe
eusales@innodisk.com
+31-040-282-1818
Japan
jpsales@innodisk.com
+81-45-594-7581
China
sales_cn@innodisk.com
+86-755-21673689

www.innodisk.com

© 2014 Innodisk Corporation.
All right reserved. Specifications are subject to change without prior notice.

September 18, 2014

Order information

EMSS-32R1-C1
mSATA to Dual SATA3 RAID Module