EGSS-32R1
M.2 2242 to Dual SATA III RAID Module

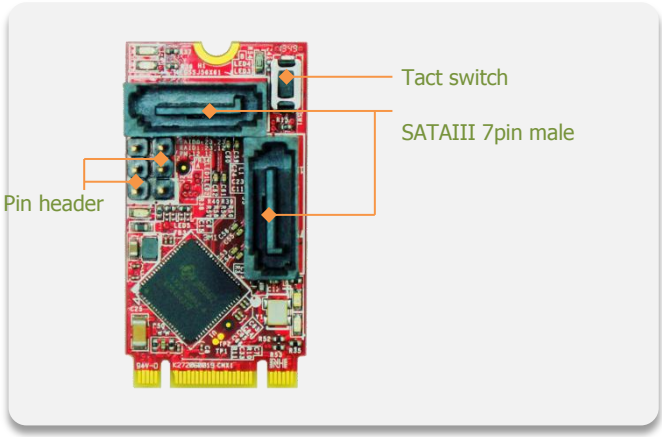

Features

- –Supports SATA to dual SATA III Port Multiplier.
- –Supports H/W RAID 0/1 over SATA.
- –30μ golden finger, 3 years warranty.
- –Industrial design, manufactured in innodisk Taiwan

Mechanical Drawing

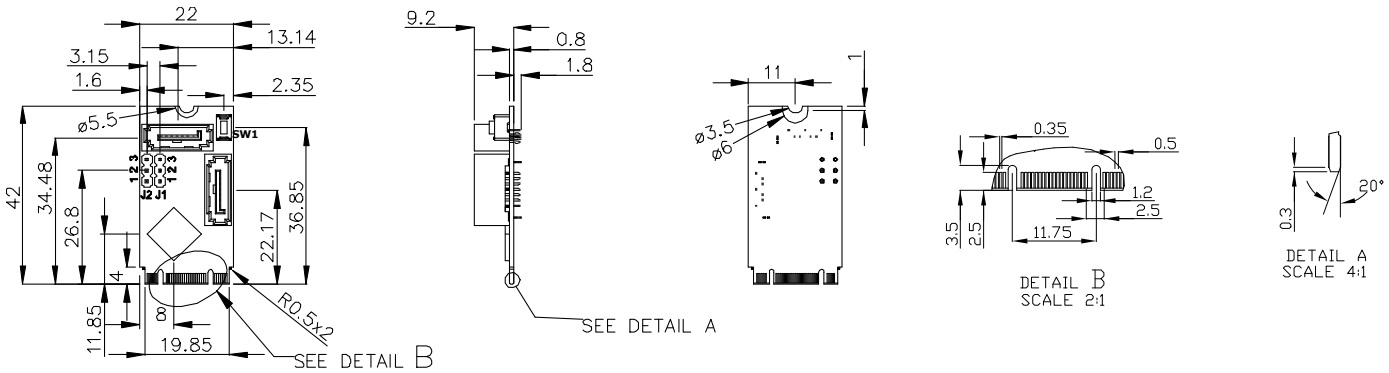

Specifications

Form-Factor	M.2 2242-B-M
Input I/F	SATA III
Output I/F	SATA III
Output Connector	SATA 7pin x 2
Bridge	JMS562
Max TDP	1.65W (3.3V x 498mA)
Dimension (WxLxH)	22 x 42 x 11mm, Weight: 5.5g
Temperature	Operation: STD: 0˚C ~ +70˚C Storage: -55˚C ~ +95˚C
Environment	Vibration: 5G @7~2000Hz, Shock: 50G @ 0.5ms
Notes	1. RAID Mode Setting: [J2:J1] RAID0: 23:23, RAID1: 23:12, PM: 12:12 2. Press tact switch SW1 for reset.

Headquarters (Taiwan)
5F., No. 237, Sec. 1, Datong Rd., Xizhi Dist., New Taipei City 221, Taiwan
Tel: +886-2-77033000
Email: sales@innodisk.com

Branch Offices:
USA
usasales@innodisk.com
+1-510-770-9421
Europe
eusales@innodisk.com
+31-040-282-1818
Japan
jpsales@innodisk.com
+81-45-594-7581
China
sales_cn@innodisk.com
+86-755-21673689

www.innodisk.com

© 2014 Innodisk Corporation. All right reserved. Specifications are subject to change without prior notice.

September 18, 2014

Order information

EGSS-32R1-C1
M.2 to Dual SATA III RAID Module