INNOROBUST II PATA SSD



FEATURES

- Compliant with MIL-STD-810-F/G
- Data Security (QEraser/SEraser/Write Protect)
- iCell technology for data protection
- Excellent data transfer rate
- Conformal coating (Optional)

R: 90MB W: 90MB | S.M.A.R.T | Wear Leveling | MIL-STD-810F/G | iCell Technology

Specifications

Connector Type	IDE 44pin
Flash Type	SLC (Single Level Cell)
Density	8GB, 16GB, 32GB, 64GB, 128GB, 256GB
Interface	ATA/IDE 44pin
Sustained R/W Performance	Read：90 MB/sec (max.) Write：90 MB/sec (max.)

Environmental

DC Input	+5V DC ± 5%
Power consumption (Max.)	Read: 520 mA Write: 560 mA Idle: 200 mA
Operating Temperature	0°C~+70°C (Standard Grade) -40°C~+85°C (Industrial Grade)
Storage Temperature	-55°C~+95°C
Humidity	Relative Humidity: 10-95%, non-condensing
MTBF	> 4,000,000 hours
Certification	CE, FCC, RoHS
Warranty	5 years

Mechanicals

Dimension (W x L x H)	69.85x100.10x9.30 mm
Weight	105g±5g
Vibration	20G, 7 Hz to 2K Hz, , 3 axes
Shock	1500G, Duration: 10ms, , 3 axes

Health monitoring Tool

S.M.A.R.T.	Supported
i-S.M.A.R.T.	Supported (Utility for Windows, Linux)

Ordering Information

Capacity	Standard Grade	Industrial Grade
08GB	D2D9-08GJ21ACAQS	D2D9-08GJ21AWAQS
16GB	D2D9-16GJ21ACAES	D2D9-16GJ21AWAES
32GB	D2D9-32GJ21ACAES	D2D9-32GJ21AWAES
64GB	D2D9-64GJ21ACAES	D2D9-64GJ21AWAES
128GB	D2D9-A28J21ACAES	D2D9-A28J21AWAES
256GB	D2D9-B56J21ACAES	D2D9-B56J21AWAES

DESIGN • SERVICE • QUALITY • DELIVERY

Headquarter (Taiwan) : HTTP://WWW.INNODISK.COM E-MAIL:SALES@INNODISK.COM
TEL: +886-2-26963000 ADD: 9F., No.100, Sec. 1, Xintai 5th Rd., Xizhi Dist., New Taipei City, Taiwan(R.O.C.)
USA Office: usasales@innodisk.com / Europe: eusales@innodisk.com / Japan: jpsales@innodisk.com / China: sales_cn@innodisk.com

iNNODISK® Beyond your imagination

Mechanical Dimension

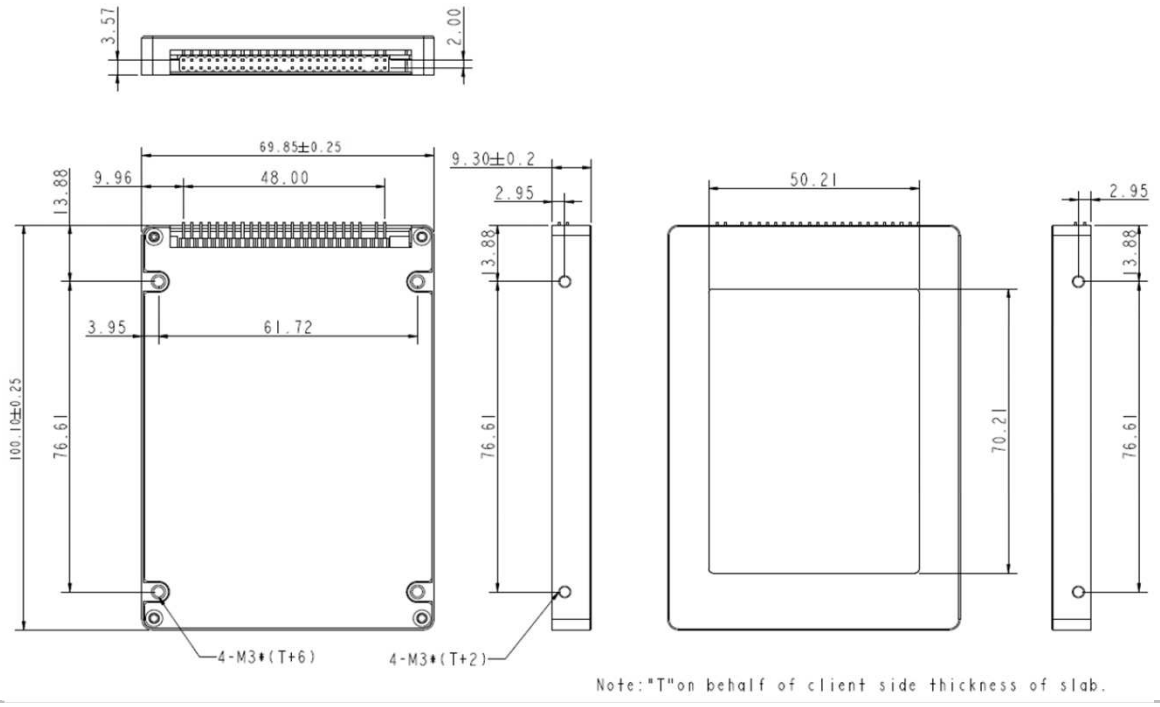

Signal Segment and Power Segment

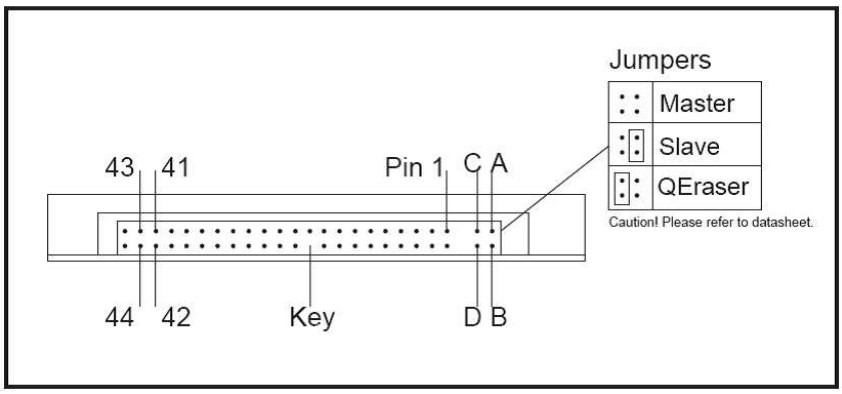

Mechanical Screw Hole

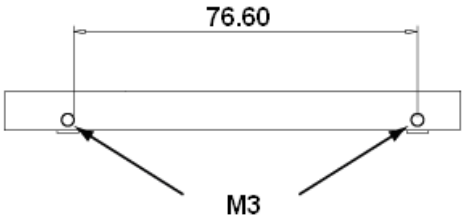

DESIGN ◎ SERVICE ◎ QUALITY ◎ DELIVERY