GenBroker – Routing Quick Start

APPLICATIONS NOTE

October 2013

Description: Guide to setting up a computer to act as a mediator node through GenBroker
OS Requirement: Win 2000, XP Pro, Server 2003, Vista, Server 2008, Windows 7
General Requirement: Prior to reading this applications note, you should first read the *GenBroker – Introduction to GenBroker Communications* applications note, which describes general concepts of GenBroker.

Introduction

The concept behind using a GenBroker Mediator Node is to use one computer as a bridge between a client PC and a server PC. This can be especially useful if the mediator node is used to join multiple networks together, allowing clients on one network to communicate with servers that are on another network. Any computer can be setup as a client PC that uses a mediator node, even computers that are running as servers.

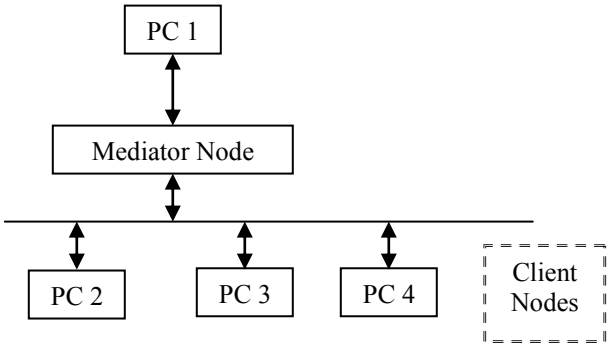

Figure 1 - Use a Mediator Node

Client Setup

Follow this setup on the Client PC if you wish to go through a mediator node to communicate to a Server PC.

1. Start the GenBroker Configurator from Start → Programs → ICONICS Tools

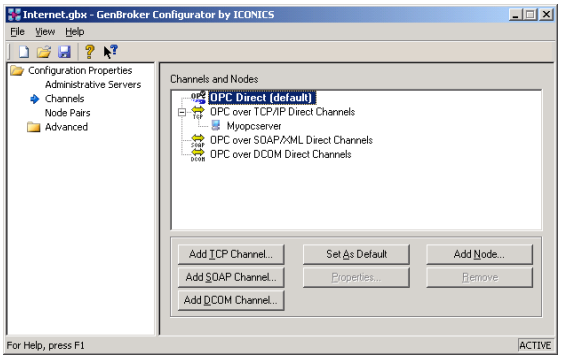

Figure 2 - GenBroker Configurator

2. Click on the "Edit" button to bring up the GenBroker Configurator
3. Select the **Channels** tree on the left hand side.
4. Click on the **Add TCP Channel** button and fill in the name or IP address of your mediator node, then click OK.

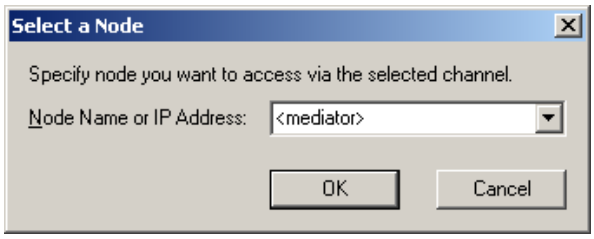

Figure 3 - Select Mediator Node

5. If desired, you may customize the TCP/IP channel properties (usually the port number used). The default settings should be sufficient for most applications. Press **OK** when finished.

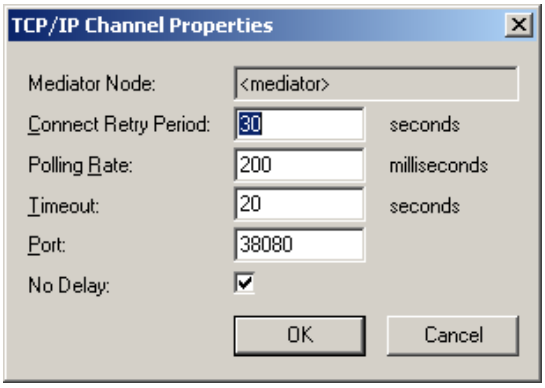

Figure 4 - TCP/IP Channel Properties

6. Set this new TCP/IP channel to be the default means of communications by right clicking on it and choosing **Set As Default**.
7. Next, add the node for the server to which you are connecting, by right clicking on the TCP/IP channel and selecting **Add Node**.
8. You will be asked to enter a node name for the remote node, so either choose it from the drop down list, or enter the name in the textbox. This could be in Microsoft Networking, IP address, or DNS name form. Press **OK** when finished, it should look similar to Figure 5. The via channel will show your mediator's machine name or ip address.

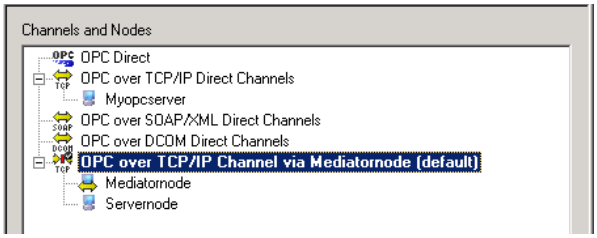

Figure 5 - Mediator Node Setup

9. Continue to add additional nodes to this channel if there are other computers that you would like to communicate with via this mediator node.
10. After saving the configuration file and exiting the Genbroker configurator, you might want to restart Genbroker process, either from GenTray, or from restarting the process itself from Task Manager.

Mediator Node Setup

Follow this setup on the Mediator node PC if you wish to use it as a bridge when communicating to other server PCs.

1. Make sure the **Mediator Node** can communicate to the actual server node. This can again be a communication via TCP/IP (GenBroker) or can simply be DCOM.
2. Before accessing the remote server, you must first start GenBroker on the Mediator Node. This allows the Mediator node to serve the data that it gets from the server machines routed through it to the client via GenBroker.