GV-VD2712 Starlight 2MP H.265 4.3x Zoom Super Low Lux WDR Pro IR Vandal Proof IP Dome

- 1/2.8" progressive scan super low lux CMOS
- Min. illumination at 0.004 lux
- Triple streams from H.265, H.264 and MJPEG
- Up to 30 fps at 1920 x 1080
- Vandal resistance (IK10 for metal casing)
- Ingress protection (IP67)
- Motorized varifocal lens for remote focus/zoom adjustment
- P-iris lens for auto iris control
- Intelligent IR
- IR distance up to 30 m (98.42 ft)
- Day and Night function (with removable IR-cut filter)
- 3-axis mechanism (pan / tilt / rotate)
- DC 12V / PoE (IEEE 802.3af)
- Two-way audio
- Wide Dynamic Range Pro (WDR Pro)
- 3D noise reduction
- Smart streaming
- Defog
- Motion detection
- Tampering alarm
- Text overlay
- Privacy mask
- IP address filtering
- Recording assigned by GV-Edge Recording Manager (Windows & Mac)
- Supports iPhone, iPad, Android & 3GPP
- 31 languages on Web interface
- ONVIF (Profile S) conformant

* Smart streaming requires GV-DVR / NVR V8.7.0.0, GV-VMS V16.10.3 or later software versions.

Introduction

The Vandal Proof IP Dome is an outdoor camera designed with IK10 vandal resistance and IP67 ingress protection. With its motorized varifocal lens, the user can zoom and focus the camera from the Web interface. The camera can support H.265 video codec to achieve better compression ratio while maintaining high quality pictures at reduced network bandwidths. For night operations, the camera allows up to 30 m (98.4 ft) IR effective distance. GV-VD2712 is capable of not only providing a color live view in near darkness but also under contrasting light intensities with its super low lux CMOS image sensor and WDR Pro.

Active Tampering Alarm

Tampered

Focus Change

Camera Shift

Dimensions

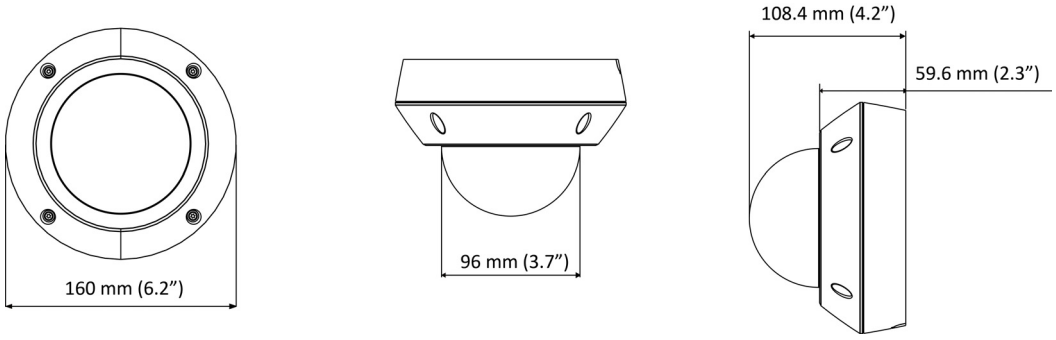

Specifications

Camera		
Image Sensor		1/2.8" progressive scan super low lux CMOS
Picture Elements		1920 (H) x 1080 (V)
Minimum Illumination	Color	0.005 Lux
	B/W	0.004 Lux
	IR ON	0 Lux
Shutter Speed		Automatic, Manual (1/5 ~ 1/16000 sec.)
White Balance		Automatic, Manual (2800K ~ 8500K)
Gain Control		Automatic
S/N Ratio		56 dB
WDR		WDR Pro
Dynamic Range		Up to 130 dB
Lens		
Megapixel		Yes
Day/Night		Yes (with removable IR-cut filter)
Focal Length		2.8 ~ 12 mm
Lens Type		Motorized varifocal lens
Maximum Aperture		F/1.7
Mount		Ø14 mm
Horizontal FOV		110° ~ 38°
Image Format		1/2.7”
Operation	Focus	Auto focus
	Zoom	4.3x optical zoom
	Iris	P-iris
IR LED Quantity		4 IR LEDs
Max. IR Distance		30 m (98.42 ft)
Operation		
Video Compression		H.265, H.264, MJPEG
Video Streaming		Stream 1 from H.265 or H.264 Stream 2 from H.265, H.264 or MJPEG Stream 3 from H.265, H.264 or MJPEG
Frame Rate		50 Hz: 25 fps at 1920 x 1080 60 Hz: 30 fps at 1920 x 1080 * The frame rate and the performance may vary depending on the number of connections and data bitrates (different scenes).
Image Setting		Brightness, Contrast, Saturation, Sharpness, Gamma, White Balance, Flicker-less, Image Orientation, Shutter Speed, D/N Sensitivity, Backlight Compensation, WDR, Defog, Low Lux Enhancement, Denoise, Metering
Audio Compression		G.711, AAC (Optional)
Audio Support		Two-way Audio (external microphone and speaker required)
Sensor Input		1 input (dry contact)
Alarm Output		1 digital output (200 mA 5V DC)

Video Resolution		
Main Stream	4:3	1280 x 960, 640 x 480
	16:9	1920 x 1080 (Default), 1280 x 720, 640 x 360
	5:4	1280 x 1024, 640 x 512
Sub Stream	4:3	1024 x 768, 640 x 480, 320 x 240
	16:9	1280 x 720, 640 x 360 (Default), 448 x 256
	5:4	1280 x 1024, 640 x 512, 320 x 256
Third Stream (Closed by Default)	4:3	640 x 480, 320 x 240
	16:9	640 x 360, 448 x 256
	5:4	640 x 512, 320 x 256
Network		
Interface		10/100 Ethernet
Protocol		DHCP, DNS, DynDNS, FTP, HTTP, HTTPS, ICMP, 3GPP/ISMA, IPv4, IPv6, Multicast, NTP, ONVIF (Profile S), QoS (DSCP), RTCP, RTSP, SMTP,SNMP, SSL, TCP/IP, UDP, UPnP
Security Feature		- No default ID and Password - 802.1x authentication - HTTPS with a SSL certificate stored in the camera - 256-bit AES encryption (requires firmware V1.14 or later working with GV-VMS V18.1 or later)
Mechanical		
Temperature Detector		Yes
Camera Angle Adjustment	Pan	0° ~ 350°
	Tilt	0° ~ 75°
	Rotate	0° ~ 340°
Connectors	Power	2-pin terminal block, PoE
	Ethernet	Ethernet (10/100 Base-T), RJ-45 cable
	Audio	1 In (microphone jack, 3.5 mm / 0.14”) 1 Out (stereo phone jack, 3.5 mm / 0.14”)
	Digital I/O	I/O wires
	Local Storage	Micro SD card slot (SD/SDHC/SDXC/UHS-I, Class 10) *UHS-II card type is not supported.
	TV-Out	BNC connector
LED Indicator		2 LEDs: Power, Status
General		
Environment Temperature	Start-up	-20 °C ~ 60 °C (-4°F ~ 140°F)
	Operation	
Humidity		10% to 90% (no condensation)
Power Source		12V DC / PoE (IEEE 802.3af)
Max. Power Consumption		8.64 W
Dimension		ø160 x 108.4 mm (6.2 x 4.27")
Weight		1.15 kg (2.54 lb)
Ingress Protection		IP67
Vandal Resistance		IK10 for metal casing
Regulatory		CE, FCC, RCM, LVD, RoHS compliant
Power over Ethernet		
PoE Standard		PoE (IEEE 802.3af Power over Ethernet / PD)
PoE Power Supply Type		End-Span and Mid-Span
PoE Power Output		Per Port 48V DC, 350 mA. Max. 15.4 watts
Web Interface		
Installation Management		Web-based configuration
Maintenance		Firmware upgrade through Web Browser or Utility
Access from Web Browser		Camera Live View, Video Recording, Change Video Quality, Bandwidth Control, Image Snapshot, Audio, Picture in Picture, Picture and Picture, Privacy Mask, Text Overlay, Digital PTZ
Language		Arabic / Bulgarian / Czech / Danish / Dutch / English / Finnish / French / German / Greek / Hebrew / Hungarian / Indonesian / Italian /Japanese / Lithuanian / Norwegian / Persian / Polish / Portuguese / Romanian / Russian / Serbian / Simplified Chinese / Slovakian / Slovenian / Spanish / Swedish / Thai / Traditional Chinese / Turkish

Applications	
Software Supported	GV-DVR / NVR (V8.7.1.0), GV-VMS (V15.11.3.0), GV-Control Center (V3.4.0.0), GV-Edge Recording Manager (V1.2.0.0), GV-Center V2 (V15.10.0.0), GV-Recording Server / Video Gateway (V1.3.0.0), GV-Redundant / Failover Server (V1.1.0.0)
Smart Device Access	GV-Eye for iOS and Android
Live Viewing	Browser (IE, Chrome, Firefox, Safari), Mobile app
CMS Server support	GV-Control Center, GV-Center V2, GV-Vital Sign Monitor

Note:

1. It is required to apply patch files to all the supported software mentioned above.
2. The signal range and data throughput may vary depending on the network conditions and environmental factors.
3. Specifications are subject to change without prior notice.

Packing List

1. H.265 Vandal Proof Dome
2. Screw x 4
3. Screw Anchor x 4
4. TV-Out Wire
5. Audio Wires x 2
6. I/O Cable
7. Installation Sticker
8. Conduit Converter
9. PG21 Conduit Connector
10. RJ-45 Connector
11. Waterproof Rubber Sets (for RJ-45 Cat.5 and DC 12V / for RJ-45 Cat.6)
12. Torx Wrench
13. Big Concave Hexagon Wrench
14. Small Concave Hexagon Wrench
15. Silica Gel Bag
16. Sticker (for Silica Gel Bag)
17. Ruler
18. Download Guide
19. Warranty Card

Note: Power adapters can be purchased upon request.

Accessories

Model No.	Name		Details
GV-Mount100	Straight Tube and Junction Box Kit		Dimensions: 200 x 170 x 257.5 mm (7.9 x 6.7 x 10.1”) Weight: 3.17 kg (6.99 lb)
GV-Mount101	Straight Tube Kit		Dimensions: 219 x 125 x 332 mm (8.6 x 4.9 x 13.1”) Weight: 1.8 kg (3.97 lb)
GV-Mount200	Wall Pendant Tube		Dimensions: 225 x 140 x 250 mm (8.9 x 5.5 x 9.8”) Weight: 900 g (1.98 lb)
GV-Mount203	Wall Pendant Tube and Junction Box Kit		Dimensions: 315 x 195.5 x 225 mm (12.4 x 7.7 x 8.9”) Weight: 2.95 kg (6.5 lb)

Model No.	Name		Details
GV-Mount206	Wall Mount Bracket Kit		Dimensions: 126.5 x 211.3 x 176.85 mm (5 x 8.3 x 6.96’’) Weight: 0.93 kg (2.06 lb)
GV-Mount300-1	Convex Corner Adapter Kit	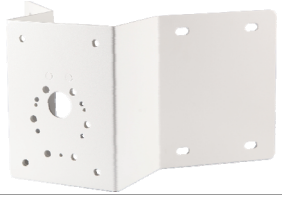	Dimensions: 238.6 x 395.2 x 210 mm (9.4’’ x 15.5” x 8.2”) Weight: 4.27 kg (9.41 lb)
GV-Mount310-1	Concave Corner Adapter Kit		Dimensions: 111.2 x 369.9 x 210 mm (4.37’’ x 14.5” x 8.2”) Weight: 2.96 kg (6.53 lb)
GV-Mount400-1	Pole Mount Bracket Kit (Ø 4 ~ 6")		Bracket: 68.4 x 240 x 163 mm (2.69” x 9.44’’ x 6.41”) Weight: 1.70 kg (3.75 lb) Steel Strap Diameter: Ø 4" ~ 6"
GV-Mount410-1	Pole Mount Bracket Kit (Ø 6 ~ 7.5")		Bracket: 68.4 x 240 x 163 mm (2.69” x 9.44’’ x 6.41”) Weight: 1.70 kg (3.75 lb) Steel Strap Diameter: Ø 6" ~ 7.5"
GV-Mount702	Extension Tube		**Four** options are available. Dimensions: Ø 5.4 x 10 or 20 or 30 or 50 cm (Ø 2.1 x 3.9 or 7.9 or 11.8 or 19.7”) Weight: 180 g or 390 g or 550 g or 800 g (0.4 lb or 0.86 lb or 1.21lb or 1.76 lb)
GV-Mount903-1	Dome Housing		Dimensions: Ø 185.51 x 165.35 mm (Ø 7.3” x 6.51”) Weight: 900 g (1.98 lb)
GV-Mount916	In-Ceiling Mount		Dimensions: Ø 205 x 63.8 mm (Ø 8 x 2.5") Weight: 645 g

Model No.	Name		Details
GV-PA191 PoE Adapter			Dimensions (H x W x D): 43 x 69 x 40 mm (1.69 x 2.72 x 1.57”) Weight: 130 g (0.29 lb)
GV-POE Switch		The GV-POE Switch is designed to provide power along with network connection for IP devices. The GV-POE Switch is available in various models with different numbers and types of ports.	
GV-Relay V2			The GV-Relay V2 is designed to expand the voltage load of GV IP devices. It provides 4 relay outputs, and each can be set as normally open (NO) or normally closed (NC) independently as per your requirement.
Metal PG21	Conduit Connector		The metal PG21 conduit connector allows you to run the wires through a 3/4” conduit pipe.
Power Adapter		Contact our sales representatives for the countries and areas supported.	