EL LVDS Adapter

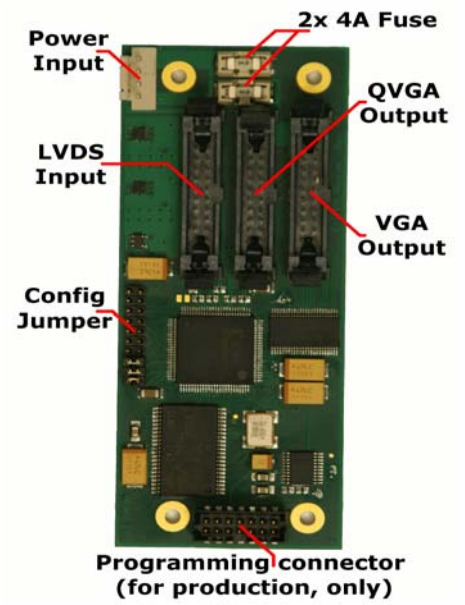

Able Design's LVDS Adapter for Planar TFEL displays enables connection with an LVDS interface.

TFEL panel can be connected directly to the LVDS adapter with 20-pin one-to-one cable. LVDS adapter jumpers allow the choice of display model to be used.

The adapter is ideal for use in industrial, medical, transportation, military, public safety and other demanding applications.

LVDS Adapter

Supported displays:

- EL320.240.36
- EL640.480-AF1
- EL640.480-AG1
- EL640.480-AM1
- EL640.480-AM8

Ordering Information:

Able Design product name:	EL-LVDS-Receiver
Planar part number:	997-5315-00LF
Description:	Able Design LVDS-adapter for TFEL-displays

Technical Specifications:

Mechanical and environment

Dimensions:	100.5 mm x 40.5 mm
Power:	+ 5 Vdc (+/- 5%), 0.2 A
Temperature:	Operating: -40 °C to +85 °C
	Storage: 40 °C to +85 °C
Relative humidity:	
	0% -90%, non-condensing

Input timing:

Resolution:	640 x 480 pixels
Refresh rate:	50 Hz– 85 Hz
Pixel clock:	21 MHz – 40 MHz
Horizontal:	680 -1280 pixels
Vertical:	486 – 960 lines
LVDS:	18/24 Bit (Vesa/Jeida)
Modes:	DE-mode support
Warranty:	1 year from date of purchase

European Headquarters
Planar System, Inc
Olarinluoma 9, P.O.Box 46
FI-02201 Espoo, Finland
Phone +358 9 4200 1
Fax: +358 9 4200 200
Email: sales.ops@planar.com

www.planar.com

www.planarembedded.com

@ 2009, Planar Systems, Inc. Planar is a registered trademark of Planar Systems, Inc. Technical information in this document is subject to change without notice. Please consult your account manager for up to date and/or custom configurations. April 23, 2009