RoHS Compliant

SATA Disk Module

SDM Power Cable-less solution Design Guide for AMH

September 17th, 2014

Version 1.5

U.S Patent No.: US 9,517,773

Apacer Technology Inc.
1F, No.32, Zhongcheng Rd., Tucheng Dist., New Taipei City, Taiwan, R.O.C
Tel: +886-2-2267-8000 Fax: +886-2-2267-2261
www.apacer.com

1. GENERAL DESCRIPTION **2**
2. PIN ASSIGNMENTS **2**
3. DEVICE & HOST ARRANGEMENT **5**
4. PHYSICAL CHARACTERISTICS **6**
5. ORDERING INFORMATION FOR THE SOCKET **8**

©2013 Apacer Technology Inc.

1. General Description

Apacer's SATA-Disk Module (SDM) is a high-performance embedded storage module in SATA 6.0 Gbps interface, backward with SATA 1.5 and 3.0 Gbps interfaces. The SDM is ideal for computing systems with standard SATA 7-pin signal connector, such as desktops, thin clients, workstations, data centers and servers. Despite of the absence of 15-pin SATA power segment, the SDM voltage supply depend on the 2 power pins at both side of the SATA connector. This design guide will provide a brief instruction for the design of this handy SATA DOM (Disk-on-Module).

Applied Model

Apacer SATA Disk Module 4 or 5 (SDM4 or 5) with 7+2 SATA connector (7-pin SATA connector and 2-pin power pins).

Notice

Modules with power cable connector for external power source are not applicable on this customized socket.

2. Pin Assignments

Device

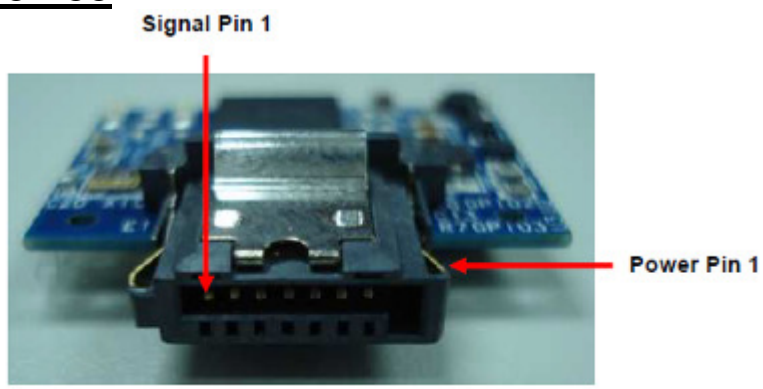

Signal Segment

Pin	Type	Description
S1	GND	
S2	Rx+	+ Differential Receive Signal
S3	Rx-	- Differential Receive Signal
S4	GND	
S5	Tx-	- Differential Transmit Signal
S6	Tx+	+ Differential Transmit Signal
S7	GND	

Power Segment

Pin	Signal Description
P1	Vcc (5V)
P2	GND

©2013 Apacer Technology Inc.

Host

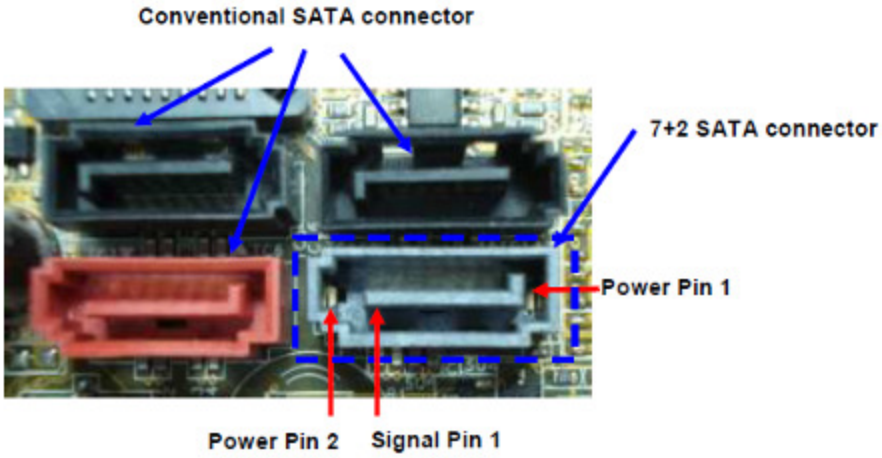

Signal Segment

Pin	Type	Description
S1	GND	
S2	Tx+	+ Differential Transmit Signal
S3	Tx-	- Differential Transmit Signal
S4	GND	
S5	Rx-	- Differential Receive Signal
S6	Rx+	+ Differential Receive Signal
S7	GND	

Power Segment

Pin	Signal Description
P1	Vcc (5V)
P2	GND

©2013 Apacer Technology Inc.

The SATA Cable/Connector Diagram

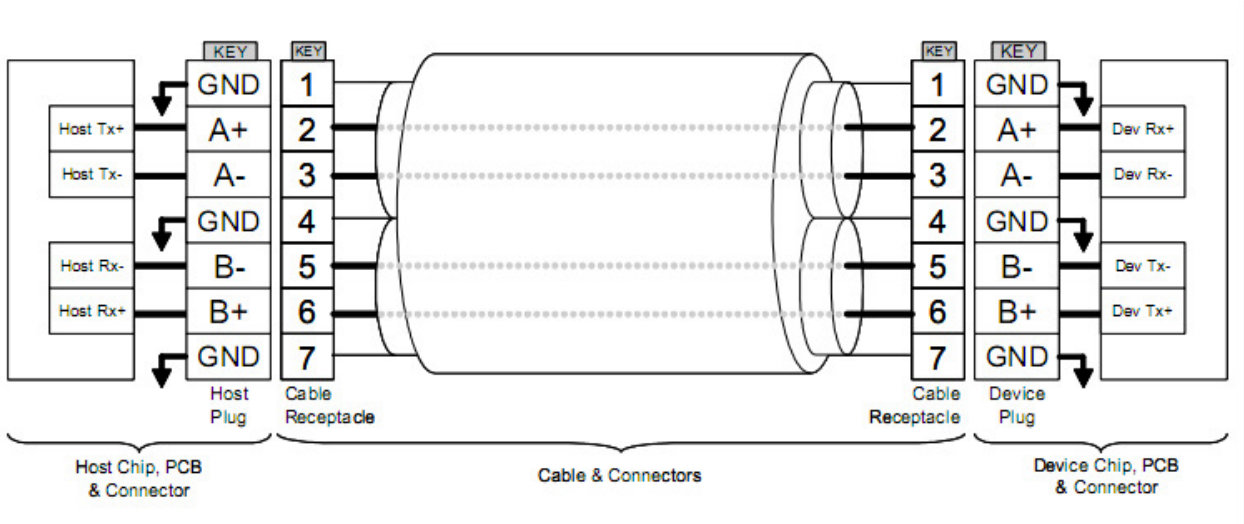

The connector on the left represents the Host with TX/RX differential pairs connected to a cable. The connector on the right shows the Device with TX/RX differential pairs also connected to the cable. Notice also the ground path connecting the shielding of the cable to the Cable Receptacle.

©2013 Apacer Technology Inc.

3. Device & Host Arrangement

Device

This connector type of SDM fits into any standard SATA male socket. There are two approaches according to the type of male SATA connector on the host side.

1. External power supply is required if plugged into the conventional male SATA.
2. External power supply is not required if plugged into the 7+2 male SATA connector.

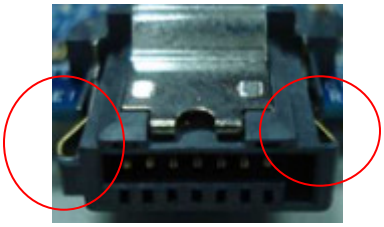

External power supply not required with the two additional metal pins (5V power and GND).

External power supply is required without the two additional metal pins.

Host

The 7+2 SATA male connector looks exactly the same as the conventional one. There are two approaches for designing the socket on the host.

1. External power supply is required if a conventional female SATA connector is used with the host, since there is no power pins.
2. No external power supply is required if a device with 7+2 female SATA connector is used with the host.

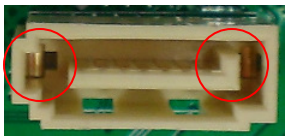

External power supply not required with the two additional metal pins (5V power and GND).

External power supply is required without the two additional metal pins.

©2013 Apacer Technology Inc.

4. Physical Characteristics

The Design of male SATA connector on motherboard

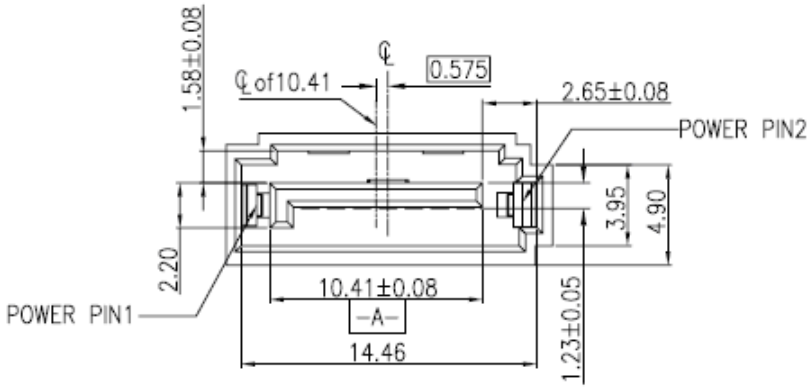

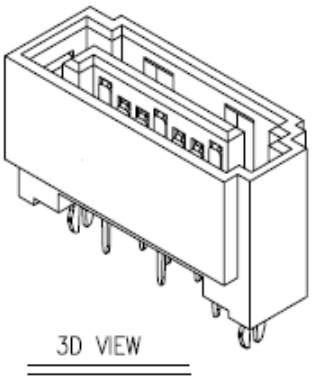

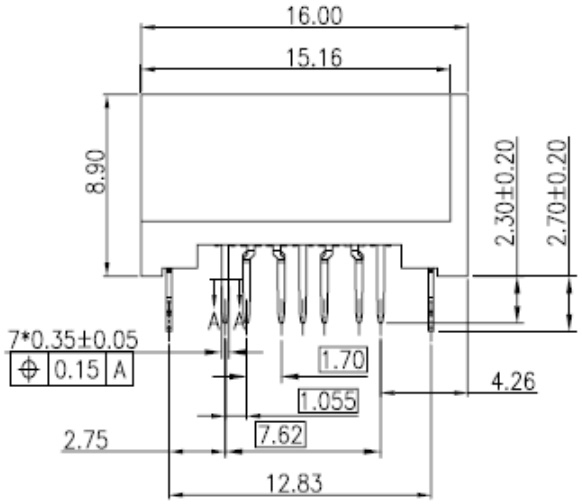

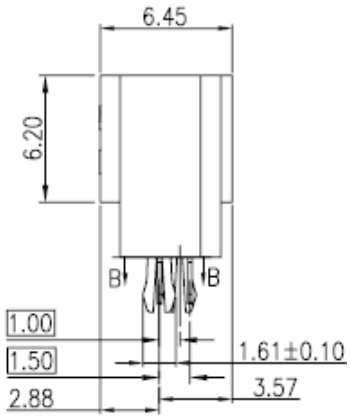

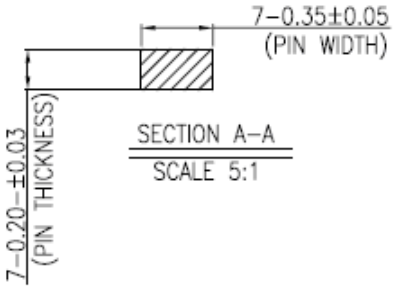

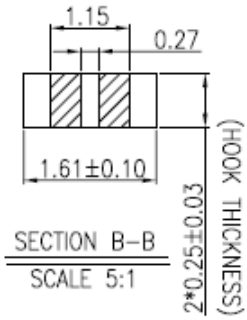

©2013 Apacer Technology Inc.

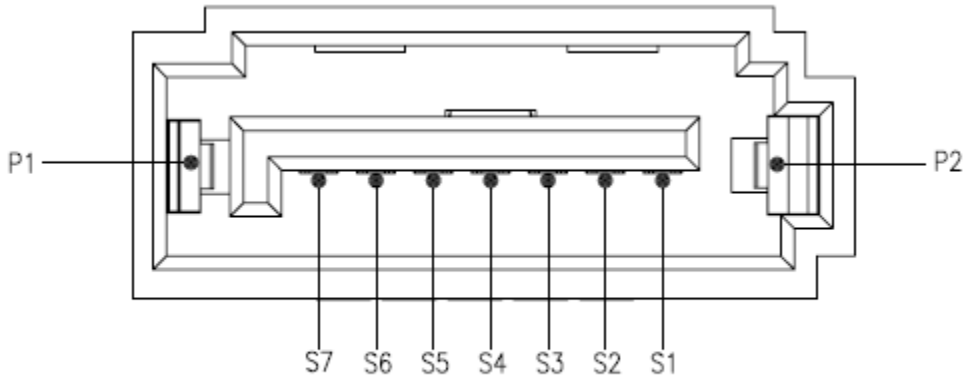

SCALE 2:1

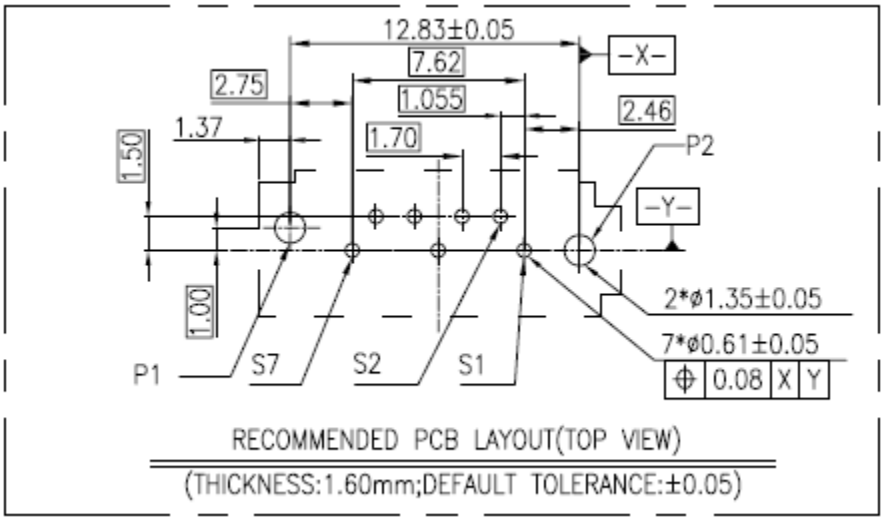

RECOMMENDED PCB LAYOUT(TOP VIEW)

(THICKNESS:1.60mm;DEFAULT TOLERANCE:±0.05)

©2013 Apacer Technology Inc.

5. Ordering Information

The ordering information of the SATA 7+2-pin onboard socket is as followed:

Item	SATA 7P Male 180° DIP
Part Number	41.06951.0200B

The hardware design of Apacer SATA 7+2-pin is an U.S registered patent.
U.S Patent No.: US 9,517,773

Please contact either Apacer sales representative for availabilities of the onboard sockets.

©2013 Apacer Technology Inc.

Revision History

Revision	Date	Description	Remark
0.1	05/14/2009	Preliminary release	
1.0	02/21/2012	Official release	
1.1	04/13/2012	Revised SATA male connector design drawing: corrected the reversed pin 1 and pin 3 locations	
1.2	12/14/2012	Replaced the original socket with the white socket	
1.3	10/02/2013	Updated mechanical design for SATA 6.0 Gbps	
1.4	03/27/2014	Added patent information	
1.5	09/17/2014	Removed “Reminder” section	

©2013 Apacer Technology Inc.

Global Presence

Taiwan (Headquarters)

Apacer Technology Inc.
Apacer Technology Inc.
1F., No.32, Zhongcheng Rd., Tucheng Dist.,
New Taipei City 236, Taiwan R.O.C.
Tel: 886-2-2267-8000
Fax: 886-2-2267-2261
amtsales@apacer.com

U.S.A.

Apacer Memory America, Inc.
386 Fairview Way, Suite102,
Milpitas, CA 95035
Tel: 1-408-518-8699
Fax: 1-408-935-9611
sa@apacerus.com

Japan

Apacer Technology Corp.
5F, Matsura Bldg., Shiba, Minato-Ku
Tokyo, 105-0014, Japan
Tel: 81-3-5419-2668
Fax: 81-3-5419-0018
jpservices@apacer.com

Europe

Apacer Technology B.V.
Science Park Eindhoven 5051 5692 EB Son,
The Netherlands
Tel: 31-40-267-0000
Fax: 31-40-267-0000#6199
sales@apacer.nl

China

Apacer Electronic (Shanghai) Co., Ltd
1301, No.251,Xiaomuqiao Road, Shanghai,
200032, China
Tel: 86-21-5529-0222
Fax: 86-21-5206-6939
sales@apacer.com.cn

India

Apacer Technologies Pvt Ltd,
535, 1st Floor, 8th cross, JP Nagar 3rd Phase,
Bangalore – 560078, India
Tel: 91-80-4152-9061
sales_india@apacer.com

©2013 Apacer Technology Inc.

©2013 Apacer Technology Inc.