MIO-2260

Intel® Atom™ N455 Pico-ITX SBC, DDR3, 18-bit LVDS, VGA, 1 GbE, Mini PCIe, 2 USB, 2 COM, MIOe

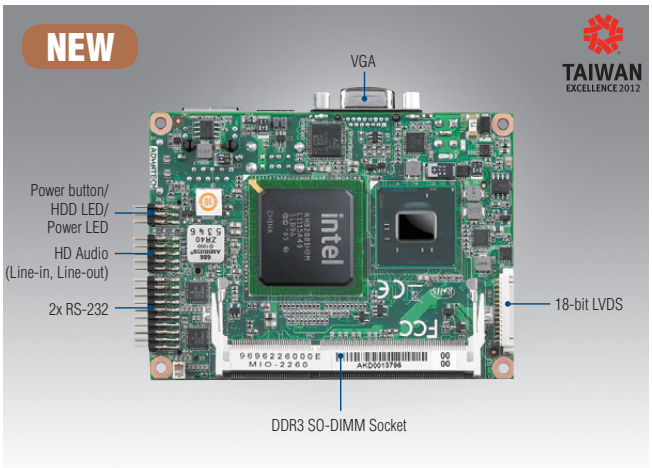

VxWorks® Windows Embedded QNX SUSIAccess CE FCC

Features

- Embedded Intel® Atom™ N455 Single Core + ICH8M, DDR3 memory support
- Intel Gen 3.5 DX9, MPEG2 Decode in HW, Dual Independent display: 18-bit LVDS + VGA
- Supports 12 V +/- 10% input power and DC power hot plug design
- 1 Intel GbE support, Rich I/O interface with 2 COM, 1 SATA, 2 USB 2.0, GPIO, SMBus, CF, and MIOe expansion interface
- Supports SUSIAccess and Embedded Software APIs

Software APIs: GPIO, H/W Monitor, Brightness, Watchdog, Backlight On/Off, SMBus & I²C, CPU Speed, System Throttling

Utilities: BIOS Flash, Monitoring, Embedded Security ID

Specifications

Processor System	CPU	Intel Atom N455 Single Core 1.66 GHz Processor
	Frequency	1.66 GHz
	L2 Cache	512 KB
	System Chipset	Intel N455 + ICH8M
	BIOS	AMI 16 Mbit Flash BIOS
Memory	Technology	DDR3 667 MHz
	Max. Capacity	2 GB
	Socket	1 x 204-pin SODIMM
Display	Chipset	Intel Atom Processor N455 1.66GHz
	VRAM	Optimized Shared Memory Architecture up to 224 MB system memory
	Graphic Engine	Intel Gen 3.5 DX9, MPEG2 Decode in HW Embedded Gen3.5+ GFX Core
	LVDS	LVDS: Single channel 18-bit LVDS up to WXGA 1366 x 768
	VGA	Intel Atom N455 Single Core up to 1400 x 1050 (SXGA)
	Dual Display	VGA+LVDS
Ethernet	Speed	10/100/1000 Mbps (Supports Wake on LAN)
	Controller	ICH8M + Intel 82567V
	Connector	RJ45
Audio	Chipset	Realtek ALC892 High Definition Audio (HD), Line-in, Line out
WatchDog Timer		Output System reset, Programmable counter from 1 ~ 255 minutes/ seconds
Storage	Compact Flash	CompactFlach TYPE II (Primary Master IDE Channel)
	SATA	1 SATA II (Max. Data Transfer Rate 300 MB/s)
Rear I/O	Serial	-
	Ethernet	1 (10/100/1000Mbps)
	VGA	1
	USB	2
	DC Power Jack	1 (supported by request)
Internal I/O	Serial	2 x RS-232 (ESD protection for RS-232: Air gap ±15 kV, Contact ±8 kV)
	I²C	1 (Shares with SMBus pin, supported by request)
	SMBus	1
	GPIO	8-bit GPIO (5 V tolerance)
Expansion	Mini PCI Express	1 (half size)
	MIOe	1 (SMBus, 3 x USB 2.0, 4 x PCIex1, LPC, HD Audio line-out, 5 Vsb/12 Vsb power)
Power	Power Type	AT (Supports DC power hot plug design)
	Power Supply Voltage	Supports single 12V input (12 V +/- 10%)
	Total peripheral power supply output	5V@ 2.8A for CPU board and MIOe module totally, 12V@ 2A for MIOe module
	Power Consumption (Typical)	0.64 A, 12 V (7.68 W)
	Power Consumption (Max, test in HCT)	0.86 A, 12 V (10.32 W)
	Power Management	APM, ACPI
	Battery	Lithium 3 V/210 mAH
Environment	Operational	0 ~ 60° C (32 ~ 140° F) (Operational humidity: 40° C @ 95% RH, Non-Condensing)
	Non-Operational	-40° C ~ 85° C and 60° C @ 95% RH, Non-Condensing
Physical Characteristics	Dimensions (L x W)	100 x 72 mm (3.9" x 2.8")
	Weight	0.42 kg (0.93 lb), weight of total package
	Total Height	33.48 mm

All product specifications are subject to change without notice
Last updated : 11-Jun-2012

Block Diagram

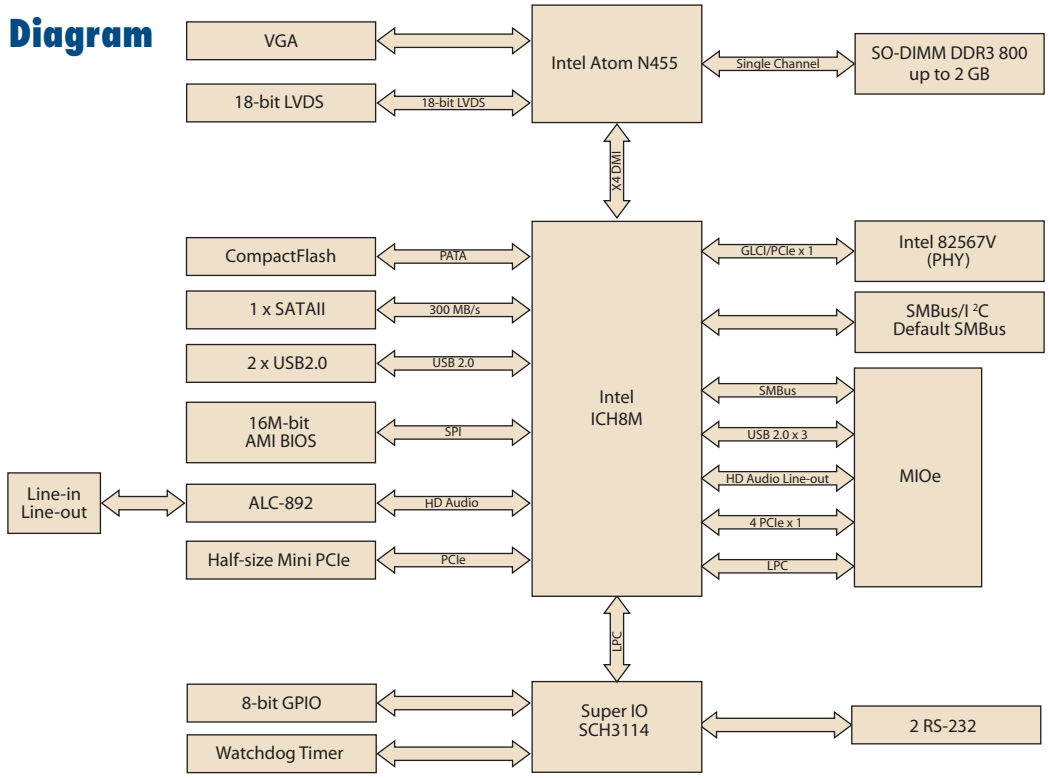

Ordering Information

Part No.	CPU	L2 Cache	LVDS	VGA	GbE	HD Audio	RS-232	USB 2.0	SATAII	GPIO	CF	MIOe	Mini PCIe	DC power jack	Thermal Solution	Operational Temp.
MIO-2260NF-S6A1E	Intel Atom N455 1.66 GHz	512 KB	18-bit	Yes	1	Yes	2	2	1	8-bit	1	1	Half-size	-	Passive	0 ~ 60° C

Note: Passive = fanless; Active = with fan

Packing List

Part No.	Description	Quantity
	MIO-2260 SBC	
	Startup Manual	
	Utility CD	
1700006291	SATA Cable 30cm	1
1701200220	RS-232 x 2 ports 2.0 mm pitch 22 cm	1
1700019156	Audio cable 2.0 mm pitch 20 cm (line in & line out)	1
1700019656	SATA power cable 5P-1.25/5P-2.0+SATA 5P 15 cm	1
9666226000E	Screw and stud pack (1 screw for Mini PCIe, 4 M3 studs and screws for heatsink)	1
1960053175T001	Passive heatsink 99.5 x 70.5 x 15.7 mm	

Optional Accessories

Part No.	Description
1960053176T001	Heat spreader for MIO-2260 99.5 x 70.5 x 11.2 mm

Embedded OS/API

Embedded OS/API	Part No.	Description
Win XPE	2070010314	XPE WES2009 V4.0 24MUI
	2070010313	XPE WES2009 V4.0 ENG
WinCE	2070010331	CE6.0 R3 Pro V6.0.0 ENG (3COM)
WES 7	2070009835	Image WES7E Intel Lunar V5.0 ENG
QNX		6.5/ 6.4/ 6.3
Vxwork		6.8
Linux		Ubuntu 10.04
Software API		SUSI V3.0

Rear I/O View

MIO-2260NF-S6A1E

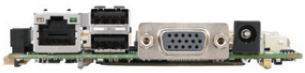

MIO-2260NF-S6A1E w/ DC Jack (supported by request)