PCM-9361

Intel® Atom™ N270 3.5" SBC, Dual LVDS, TTL, VGA, GbE, USB, SATA, PCI-104

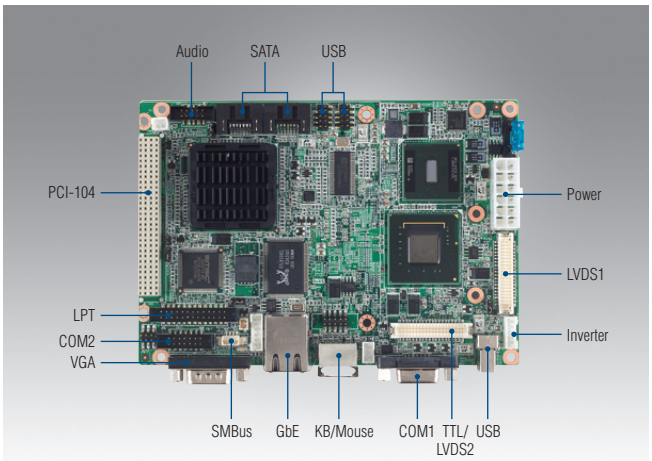

VxWorks® Windows Embedded QNX SUSIAccess CE FCC

Features

- Intel® Atom™ Processor N270+ 945GSE+ ICH7M
- Supports 18-bit TTL/ VGA/ 36-bit LVDS1/ 48-bit LVDS2
- Supports extended temperature to -40 ~ 85° C
- Supports 2 COM ports, 5 USB 2.0, 2 SATA, PCI-104 expansion
- Supports embedded software API and Utilities
- Supports SUSIAccess and Embedded Software APIs

Software APIs: GPIO, H/W Monitor, Brightness, Watchdog, Backlight On/Off, SMBus, CPU Speed, System Throttling

Utilities: BIOS flash, Monitoring

Specifications

Processor System	CPU	Intel Atom N270 1.60 GHz
	Front Side Bus	533 MHz
	Frequency	1.60 GHz
	L2 Cache	512 KB
	System Chipset	Intel 945GSE+ ICH7M
	BIOS	Award 4 Mbit
Memory	Technology	DDR2 400/533 MHz
	Max. Capacity	2 GB
	Socket	1 x 200-pin SODIMM
Display	Chipset	Intel 945GSE
	VRAM	Optimized shared memory architecture up to 224 MB system memory
	Graphics Engine	Intel 3.5 Gen integrated graphics engine
	LVDS	LVDS1: Supports single channel 18-bit or dual channel 36-bit LVDS LVDS2: Supports single channel 18/24-bit or dual channel 36/48-bit LVDS (only for PCM-9361EVG) LVDS2 wide screen supports: EX:1366 x 768 (24-bit), 1440 x 900 (48-bit), 1680 x 1050 (48-bit), 1920 x 1080 (48-bit)
	VGA	Supports QXGA Up to 2048 x 1536
	TTL LCD	18-bit TTL: Up to 800 x 600
	Dual Display	- VGA + LVDS1 - VGA + TTL - LVDS1+LVDS2 / VGA+LVDS2 (not supported in DOS mode, only for PCM-9361EVG)
Ethernet	Speed	10/100/1000 Mbps (Supports Wake on LAN)
	Controller	Realtek 8110SC
	Connector	RJ-45 on GbE
Audio	Chipset	Realtek ALC888, High Definition Audio (HD), Line-in, Line out, Mic-in
WatchDog Timer		Output System reset, Programmable counter from 1 ~ 255 minutes/ seconds
Storage	CompactFlash	CompactFlash type I/II (Primary Master IDE Channel)
	SATA	2 x SATA (Max. Data Transfer Rate 150 MB/s)
	Floppy	1 (shared with LPT)
Rear I/O	Serial	1 (COM1 supports RS-232) (ESD protection for RS-232: Air gap ±15kV, Contact ±8kV)
	Ethernet	1 (10/100/1000 Mbps GbE1)
	PS/2 KB/Mouse	1
	VGA	1
	USB	1
Internal I/O	USB	4 x USB 2.0
	Serial	1 x COM (ESD protection for RS-232: Air gap ±15kV, Contact ±8kV) COM2 supports RS-232/422/485 (Supports RS-485 auto flow control)
	Parallel(LPT)	1
	FDD	1 (shared with LPT)
	SMBus	1
	GPIO	8-bit GPIO
Expansion	PCI-104 slot	PCI-104 Expansion
Power	Power Type	AT/ATX
	Power Supply Voltage	ATX: +5 V ± 5%, +12 V ± 10% AT: 5V only to boot up (12 V is optional for LCD inverter and add on card)
	Power Consumption	1.9 A @ 5 V, 0.07 A @ 12 V (10.34 W)
	Power Consumption (Max, test in HCT)	2.38 A @ 5 V, 0.09 A @ 12 V (12.98 W)
	Power Management	APM1.2, ACPI3.0, wake on LAN, and modem ring-in functions
	Battery	Lithium 3 V / 210 mAH
Environment	Operational	0 ~ 60° C (32 ~ 140° F) (Operating humidity: 40° C @ 95% RH non-condensing)
	Non-Operational	-40° C ~ 85° C and 60° C @ 95% RH non-condensing
Physical Characteristics	Dimensions (L x W)	146 x 102 mm (5.7" x 4")
	Weight	0.64 kg (1.41 lb), weight of total package
	Total Height	28.2 mm

All product specifications are subject to change without notice

Last updated : 11-Jun-2012

Block Diagram

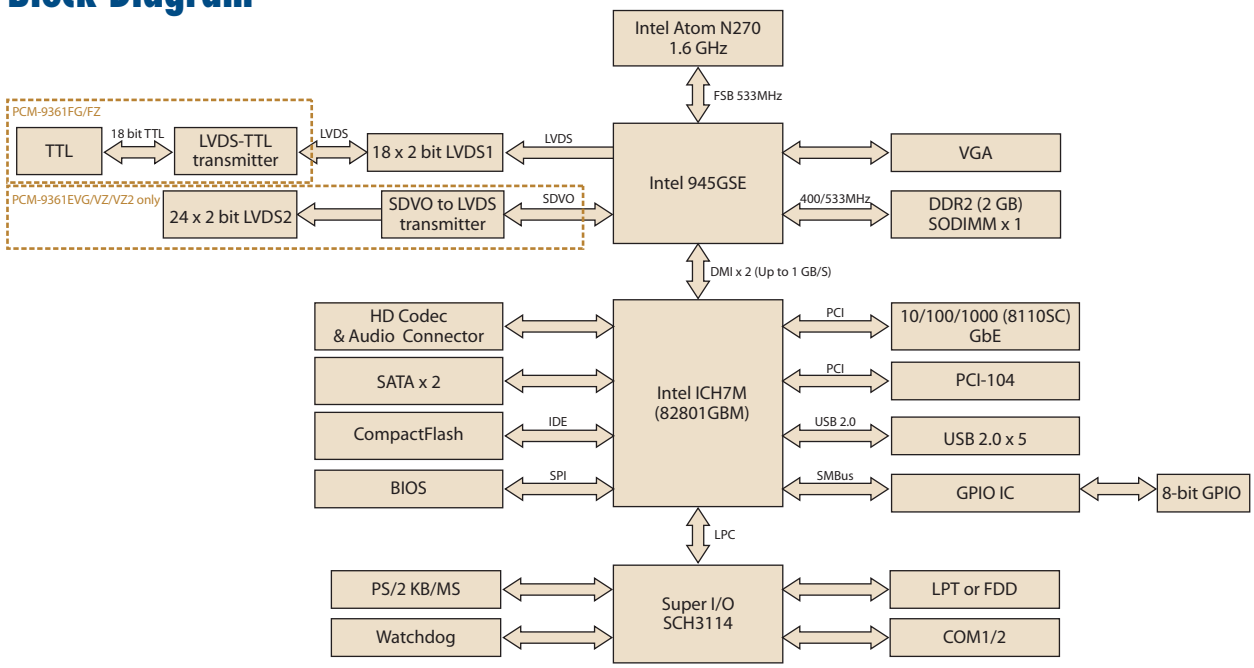

Ordering Information

Part No.	CPU	Memory	VGA	LVDS	LVDS2	TTL	GbE	Audio	USB 2.0	RS-232	RS232/ 422/485	SATA	Expansion	Thermal Solution	Operating Temp.
PCM-9361FG-S6A1E	Atom N270 1.6G	SODIMM	1	-	-	1	1	Yes	5	1	1	2	PCI-104	Passive	0 ~ 60° C
PCM-9361EG-S6A1E	Atom N270 1.6G	SODIMM	1	18/36-bit	-	-	1	Yes	5	1	1	2	PCI-104	Passive	0 ~ 60° C
PCM-9361EVG-S6A1E	Atom N270 1.6G	SODIMM	1	18/36-bit	36/48-bit	-	1	Yes	5	1	1	2	PCI-104	Passive	0 ~ 60° C
PCM-9361L-S6A1E (W/O cables)	Atom N270 1.6G	SODIMM	1	18/36-bit	-	-	1	Yes	5	1	1	2	-	Passive	0 ~ 60° C
PCM-9361FZ-1GS6A1E	Atom N270 1.6G	1G bundle	1	-	-	1	1	Yes	5	1	1	2	PCI-104	Passive	-20 ~ 80° C
PCM-9361VZ-1GS6A1E	Atom N270 1.6G	1G bundle	1	18/36-bit	36/48-bit	-	1	Yes	5	1	1	2	PCI-104	Passive	-20 ~ 80° C
PCM-9361VZ21GS6A1E	Atom N270 1.6G	1G bundle	1	18/36-bit	36/48-bit	-	1	Yes	5	1	1	2	PCI-104	Passive	-40 ~ 85° C

Note: Passive = fanless; Active = with fan

Packing List

Part No.	Description	Quantity
	PCM-9361 SBC	
	Startup Manual	
	Utility CD	
9689000002	mini Jumper pack	1
1700000265	ATX Power Cable 10 cm	1
1700006291	SATA Cable 30 cm	1
1700060202	PS/2 cable 20 cm	1
1701140201	COM2 IDE D-SUB 20 cm cable	1
1703100121	USB 2 x 5P-2.0 12 cm W/BKT cable	2
1703100152	Audio Cable	1
1700260250	LPT IDE 26P D-SUB 25 cm cable	1
1703150102	SATA 10 cm power cable	1
1960024933S00B	ICH7M heatsink (38.1x33.6x7.5mm)	1
1960029380N000	Heatsink for N270 and 945GSE (50.77x88.59x15mm)	1

Rear I/O View

Optional Accessories

Part No.	Description
1700001531	LPT to FDD cable
1700016161	AT power cable, 2 x 6P to 3 x 4P 10 cm
1700016141	AT power cable, 2 x 6P to 2 x 10P 10 cm

Embedded OS/API

Embedded OS/API	Part No.	Description
WinCE	2070008069	Image CE 6.0 Pro PCM-9361 V1.1 JPN
Win XPE	2070006670	Image XPE FP2007 PCM-9361 V3.01 ENG
	2070007911	XPE WES2009 Intel-Mulitprocess V4.0 MUI24
	2070007789	XPE WES2009 Intel-Mulitprocess V4.0 ENG
QNX	2070006929	Image QNX V6.4 PCM-9361 V1.0 ENG
Vxwork		6.8
Linux		Ubuntu 10.04
Software API	205E936000	EmbCore PCM-9361 3.5" SUSI package V3.08