SOM-6787

Intel® Core™2 Duo Processor GS45 COM-Express Compact Module

Features

- Embedded Intel® Core™2 Duo/Celeron® M processor
- Intel GMA X4500 Gen 5 DX10, HW support for H.264, VC-1 and MPEG2
- Supports 2 DDR3 SODIMM up to 8 GB
- Supports PCIe x16, 5 PCIe x1, 4 PCI, LPC, 4 SATAII, 8 USB 2.0
- Supports embedded software APIs and Utilities

Software APIs: Watchdog, I²C, SMBus, H/W Monitor, GPIO, Backlight On/Off

Utilities: BIOS flash, Monitoring, Flash Lock, Embedded Security ID

Specifications

Form Factor		COM-Express Compact Module, Type II Pin-out
Processor System	CPU	Intel Core 2 Duo SP9300, LV Core 2 Duo SL9400, ULV Core 2 Duo SU9300 Intel ULV Celeron M 722, ULV Celeron M 723
	Front Side Bus	800/1066 MHz
	System Chipset	Intel GS45/ICH9M SFF
	BIOS	AMI 32 Mbit Flash BIOS
Memory	Technology	DDR3 800/1066 MHz
	Max. Capacity	up to 8 GB
	Socket	2 x 204-pin SODIMM sockets
Display	Chipset	Intel GS45
	VRAM	DVMT 5.0 supports up to 1024 MB
	Graphics Engine	Mobile Intel GMA X4500 3D/2D engine, HDMI, Displayport, SDVO shared with PCIe x16 (PEG)
	LCD	Single and dual channel 24/48-bit LVDS
	VGA	up to QXGA (2048 x 1536)
	TV-out	Yes
	SDVO	2 SDVO Ports
	Dual Display	Dual Display of VGA, LVDS,TV-out, HDMI, Displayport, SDVO (Note: SDVO function is supported by customized BIOS)
Ethernet	Chipset	Intel 82567 Gigabit Ethernet
	Speed	10/100/1000 Mbps
WatchDog Timer		256 timer intervals, from 0 to 255 sec or min setup by software, jumperless selection, generates system reset
Expansion		LPC, PCIe x16, 5 PCIe x1, 4 PCI master
I/O	SATA	4 x SATAII
	USB	8 x USB 2.0 ports
	Audio	High definition audio interface
	GPIO	8-bit GPIO
Power	Power Type	ATX, AT
	Power Supply Voltage	+12 V and +5 VSB for ATX, +12V for AT
	Power Consumption (Typical)	(1 GB DDR3 1066) SP9300: +12V @ 0.66A
	Power Consumption (Max. test in HTC)	(1 GB DDR3 1066) SP9300: +12V @ 2.1A
Environment	Operating Temperature	0 ~ 60° C (32 ~ 140° F)
	Operating Humidity	0% ~ 90% relative humidity, non-condensing
Mechanical	Dimensions	95 x 95 mm (3.74" x 3.74")

All product specifications are subject to change without notice

Last updated : 9-May-2011

Board Diagram

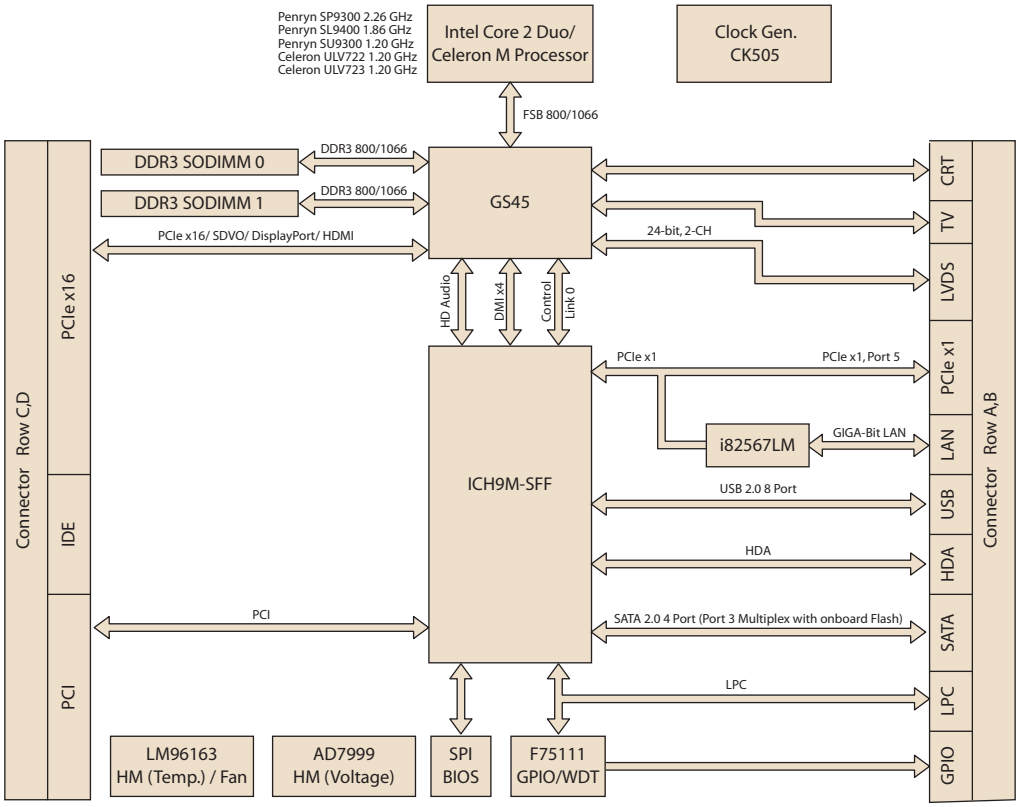

Ordering Information

Part No.	CPU	L2 Cache	Chipset	LVDS	VGA	SDVO	Giga LAN	HD Audio	PCIe x16	PCIe x1	PCI	USB 2.0	SATA	LPC	ATX Power	AT Power	Thermal Solution	Operating Temp.
SOM-6787FG-S1A1E	Intel ULV Celeron M 723 1.2 GHz	1 MB	Intel GS45	48-bit	Yes	2	1	Yes	1	5	4	8	4 x SATAII	1	Yes	Yes	Active	0 ~ 60° C
SOM-6787FG-S2A1E	Intel ULV Celeron M 722 1.2 GHz	1 MB	Intel GS45	48-bit	Yes	2	1	Yes	1	5	4	8	4 x SATAII	1	Yes	Yes	Passive	0 ~ 60° C
SOM-6787FG-S3A1E	Intel ULV Core 2 Duo SU9300, 1.2 GHz	3 MB	Intel GS45	48-bit	Yes	2	1	Yes	1	5	4	8	4 x SATAII	1	Yes	Yes	Active	0 ~ 60° C
SOM-6787FG-S9A1E	Intel LV Core 2 Duo SL9400, 1.86 GHz	6 MB	Intel GS45	48-bit	Yes	2	1	Yes	1	5	4	8	4 x SATAII	1	Yes	Yes	Active	0 ~ 60° C
SOM-6787FG-U3A1E	Intel Core 2 Duo SP9300, 2.26 GHz	6 MB	Intel GS45	48-bit	Yes	2	1	Yes	1	5	4	8	4 x SATAII	1	Yes	Yes	Active	0 ~ 60° C

Development Board

Part No.	Description
SOM-DB5700G-00A2E	Development Board for COM-Express with GLAN

Packing List

Part No.	Description	Quantity
-	SOM-6787 CPU Module	1
-	Utility CD	1
1960046889N001	Heatspreader	1

Optional Accessories

Part No.	Description
1960048815N001	Semi-Heatsink 95 x 95 x 17 mm
1960048819N001	Semi- Cooler 95 x 95 x 33.5 mm with 12 V Fan

Value-Added Software Services

Software API: An interface that defines the ways by which an application program may request services from libraries and/or operating systems. Provides not only the underlying drivers required but also a rich set of user-friendly, intelligent and integrated interfaces, which speeds development, enhances security and offers add-on value for Advantech platforms. It plays the role of catalyst between developer and solution, and makes Advantech embedded platforms easier and simpler to adopt and operate with customer applications.

Software APIs

Control

GPIO

General Purpose Input/Output is a flexible parallel interface that allows a variety of custom connections. It allows users to monitor the level of signal input or set the output status to switch on/off a device. Our API also provides Programmable GPIO, which allows developers to dynamically set the GPIO input or output status.

SMBus

SMBus is the System Management Bus defined by Intel® Corporation in 1995. It is used in personal computers and servers for low-speed system management communications. The SMBus API allows a developer to interface a embedded system environment and transfer serial messages using the SMBus protocols, allowing multiple simultaneous device control.

I²C

I²C is a bi-directional two wire bus that was developed by Philips for use in their televisions in the 1980s.
The I²C API allows a developer to interface with an embedded system environment and transfer serial messages using the I²C protocols, allowing multiple simultaneous device control.

Monitor

Watchdog

A watchdog timer (WDT) is a device that performs a specific operation after a certain period of time if something goes wrong and the system does not recover on its own.
A watchdog timer can be programmed to perform a warm boot (restarting the system) after a certain number of seconds.

Hardware Monitor

The Hardware Monitor (HWM) API is a system health supervision API that inspects certain condition indexes, such as fan speed, temperature and voltage.

Hardware Control

The Hardware Control API allows developers to set the PWM (Pulse Width Modulation) value to adjust fan speed or other devices; it can also be used to adjust the LCD brightness.

Display

Brightness Control

The Brightness Control API allows a developer to interface with an embedded device to easily control brightness.

Backlight

The Backlight API allows a developer to control the backlight (screen) on/off in an embedded device.

Power Saving

CPU Speed

Make use of Intel SpeedStep technology to reduce power power consumption. The system will automatically adjust the CPU Speed depending on system loading.

System Throttling

Refers to a series of methods for reducing power consumption in computers by lowering the clock frequency. These APIs allow the user to lower the clock from 87.5% to 12.5%.

Software Utilities

BIOS Flash

The BIOS Flash utility allows customers to update the flash ROM BIOS version, or use it to back up current BIOS by copying it from the flash chip to a file on customers' disk. The BIOS Flash utility also provides a command line version and API for fast implementation into customized applications.

Embedded Security ID

The embedded application is the most important property of a system integrator. It contains valuable intellectual property, design knowledge and innovation, but it is easily copied! The Embedded Security ID utility provides reliable security functions for customers to secure their application data within embedded BIOS.

Monitoring

The Monitoring utility allows the customer to monitor system health, including voltage, CPU and system temperature and fan speed. These items are important to a device; if critical errors happen and are not solved immediately, permanent damage may be caused.

eSOS

The eSOS is a small OS stored in BIOS ROM. It will boot up in case of a main OS crash. It will diagnose the hardware status, and then send an e-mail to a designated administrator. The eSOS also provides remote connection: Telnet server and FTP server, allowing the administrator to rescue the system.

Flash Lock

Flash Lock is a mechanism that binds the board and CF card (SQFlash) together. The user can "Lock" SQFlash via the Flash Lock function and "Unlock" it via BIOS while booting. A locked SQFlash cannot be read by any card reader or boot from other platforms without a BIOS with the "Unlock" feature.