SOM-5890

Intel® Core™ i7/i5/i3/Celeron® Processor COM-Express Basic Module

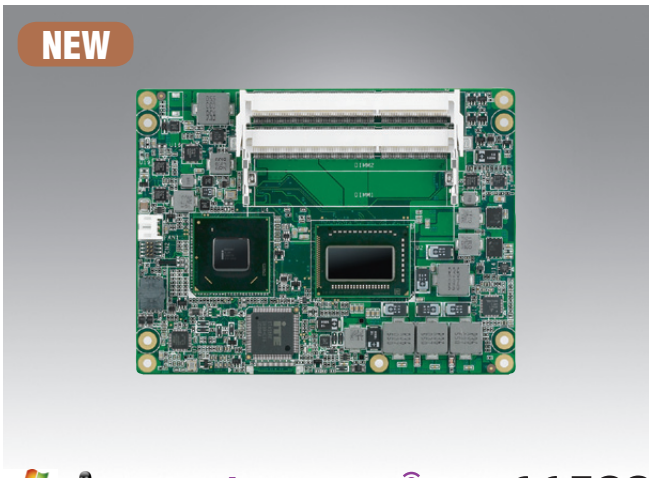

Windows Embeddec iManager SUSIAccess CE FCC

Features

- Embedded Intel® Core™ i7/i5/i3/Celeron processor + QM67
- Intel Gfx supports VGA, 18/24-bit 2-CH LVDS, HDMI, DVI, DP
- Supports Dual Channel DDR3-1333 SODIMM sockets up to 16 GB
- Supports PCIe x16, 7 PCIe x1, 2 SATAIII, 2 SATAII, 8 USB 2.0, GbE
- Supports iManager, SUSIAccess and Embedded Software APIs

Software APIs: Watchdog, I²C, SMBus, H/W Monitor, GPIO, Brightness Control

Utilities: BIOS flash, Monitoring, Embedded Security ID

Specifications

Form Factor		COM-Express 2.0 Basic Module, Type 6 Pin-out
Processor System	CPU	Intel Core i7-2715QE Processor (4C, 6M Cache, 2.1 GHz) Intel Core i7-2655LE Processor (2C, 4M Cache, 2.2 GHz) Intel Core i7-2610UE Processor (2C, 4M Cache, 1.5 GHz) Intel Core i5-2515E Processor (2C, 3M Cache, 2.5 GHz) Intel Core i3-2310E Processor (2C, 3M Cache, 2.1 GHz) Intel Core i3-2340UE Processor (2C, 3M Cache, 1.3 GHz) Intel Celeron B810E Processor (2C, 2M Cache, 1.6 GHz) Intel Celeron 847E Processor (2C, 2M Cache, 1.1 GHz) Intel Celeron 827E Processor (1C, 1.5M Cache, 1.4 GHz)
	System Chipset	Intel QM67
	BIOS	AMI 64 Mbit Flash BIOS
Memory	Technology	DDR3 1066/1333 MHz
	ECC Support	A1 Series - not supported, B1 Series - supported
	Max. Capacity	16 GB
	Socket	2 x 204-pin SODIMM sockets
Display	Chipset	Intel Gfx integrated in Core i7, Core i5, or Core i3
	LVDS	Single and dual channel 18/24-bit LVDS
	VGA	up to 2048 x 1536
	HDMI / DVI / DP	3 ports shared
	SDVO	1 port shared with HDMI/DVI/Displayport
	TV-out	-
Ethernet	Chipset	Intel 82579LM Gigabit Ethernet
	Speed	10/100/1000 Mbps
WatchDog Timer		65536 level timer interval, from 0~65535 sec, multi-level, multi-option watchdog timer
Expansion		1 PEGx16, 7 PCIe x1, LPC, SPI, SMBus, I2C
I/O	SATA	2 x SATAIII (6.0 Gb/s), 2 x SATAII (3.0 Gb/s)
	USB	8 x USB 2.0
	Audio	High definition audio interface
	GPIO	8-bit GPIO
	Serial port	2 x UARTs up to 115.2K bps
Power	Power Type	ATX, AT
	Power Supply Voltage	+12 V and +5 VSB for ATX, +12V for AT
Environment	Operating Temperature	0 ~ 60° C (32 ~ 140° F)
	Operating Humidity	0% ~ 90% relative humidity, non-condensing
Mechanical	Dimensions	125 x 95 mm (4.92" x 3.74")

All product specifications are subject to change without notice

Block Diagram

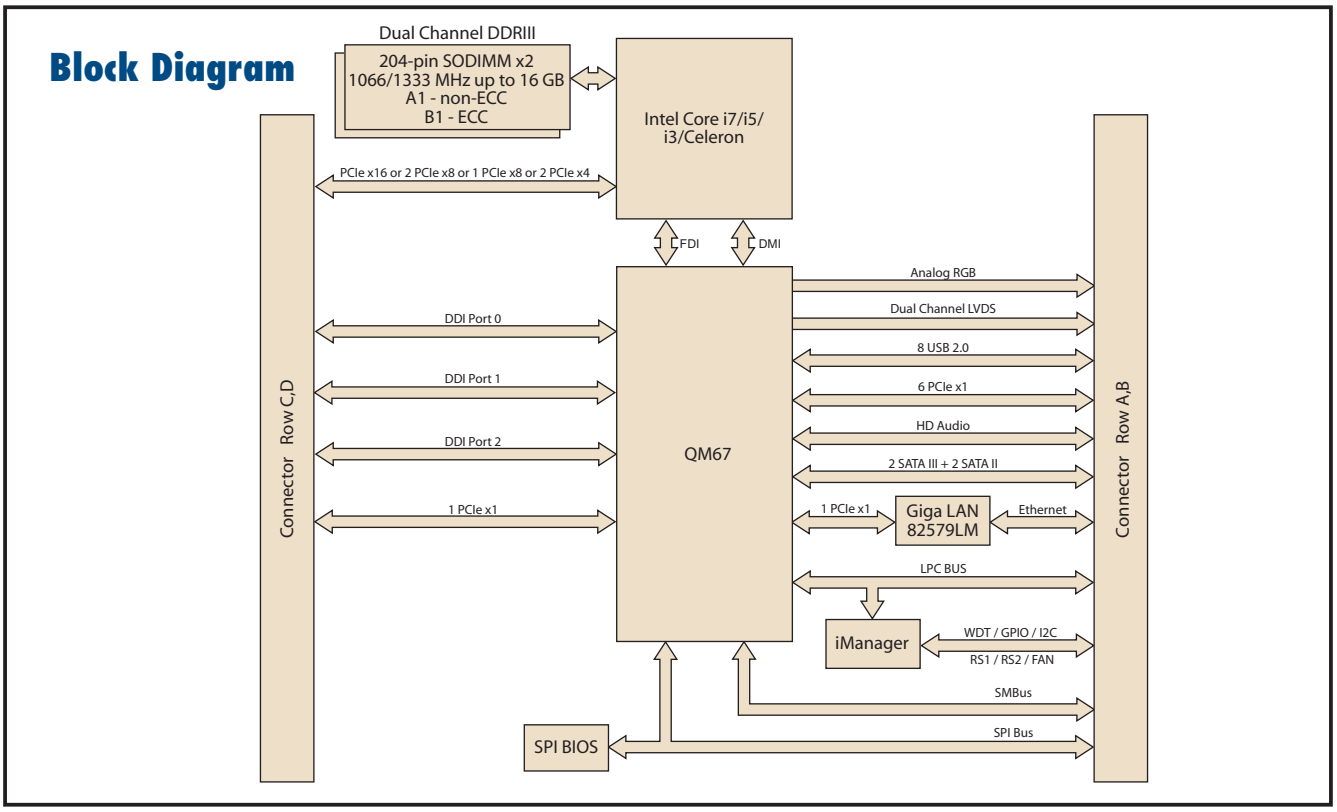

Ordering Information

Part No.	CPU	LLC	Chipset	DDR3 SODIMM	LVDS	VGA	HDMI / DVI / DP	SDVO	Giga LAN	HDA	PEG x16	PCIe x1	USB 2.0	SATA	LPC	ATX Power	AT Power	Thermal Solution	Operating Temp.
SOM-5890FG-U1A1E	Core i7-2715QE 2.1 GHz	6 MB	QM67	non-ECC	18/24-bit	Yes	3	1	1	Yes	1	7	8	2 x SATA III 2 x SATA II	Yes	Yes	Yes	Active	0 ~ 60° C
SOM-5890FG-U2A1E	Core i7-2655LE 2.2 GHz	4 MB	QM67	non-ECC	18/24-bit	Yes	3	1	1	Yes	1	7	8	2 x SATA III 2 x SATA II	Yes	Yes	Yes	Active	0 ~ 60° C
SOM-5890FG-S5A1E	Core i7-2610UE 1.5 GHz	4 MB	QM67	non-ECC	18/24-bit	Yes	3	1	1	Yes	1	7	8	2 x SATA III 2 x SATA II	Yes	Yes	Yes	Active	0 ~ 60° C
SOM-5890FG-U5A1E	Core i5-2515E 2.5 GHz	3 MB	QM67	non-ECC	18/24-bit	Yes	3	1	1	Yes	1	7	8	2 x SATA III 2 x SATA II	Yes	Yes	Yes	Active	0 ~ 60° C
SOM-5890FG-U0A1E	Core i3-2310E 2.1 GHz	3 MB	QM67	non-ECC	18/24-bit	Yes	3	1	1	Yes	1	7	8	2 x SATA III 2 x SATA II	Yes	Yes	Yes	Active	0 ~ 60° C
SOM-5890FG-S3A1E	Core i3-2340UE 1.3 GHz	3 MB	QM67	non-ECC	18/24-bit	Yes	3	1	1	Yes	1	7	8	2 x SATA III 2 x SATA II	Yes	Yes	Yes	Active	0 ~ 60° C
SOM-5890FG-S6A1E	Celeron B810E 1.6 GHz	2 MB	QM67	non-ECC	18/24-bit	Yes	3	1	1	Yes	1	7	8	2 x SATA III 2 x SATA II	Yes	Yes	Yes	Active	0 ~ 60° C
SOM-5890FG-S1A1E	Celeron B847E 1.1 GHz	2 MB	QM67	non-ECC	18/24-bit	Yes	3	1	1	Yes	1	7	8	2 x SATA III 2 x SATA II	Yes	Yes	Yes	Active	0 ~ 60° C
SOM-5890FG-S4A1E	Celeron B827E 1.4 GHz	1.5 MB	QM67	non-ECC	18/24-bit	Yes	3	1	1	Yes	1	7	8	2 x SATA III 2 x SATA II	Yes	Yes	Yes	Active	0 ~ 60° C
SOM-5890FG-U1B1E	Core i7-2715QE 2.1 GHz	6 MB	QM67	ECC	18/24-bit	Yes	3	1	1	Yes	1	7	8	2 x SATA III 2 x SATA II	Yes	Yes	Yes	Active	0 ~ 60° C
SOM-5890FG-U2B1E	Core i7-2655LE 2.2 GHz	4 MB	QM67	ECC	18/24-bit	Yes	3	1	1	Yes	1	7	8	2 x SATA III 2 x SATA II	Yes	Yes	Yes	Active	0 ~ 60° C
SOM-5890FG-S5B1E	Core i7-2610UE 1.5 GHz	4 MB	QM67	ECC	18/24-bit	Yes	3	1	1	Yes	1	7	8	2 x SATA III 2 x SATA II	Yes	Yes	Yes	Active	0 ~ 60° C
SOM-5890FG-U5B1E	Core i5-2515E 2.5 GHz	3 MB	QM67	ECC	18/24-bit	Yes	3	1	1	Yes	1	7	8	2 x SATA III 2 x SATA II	Yes	Yes	Yes	Active	0 ~ 60° C
SOM-5890Z-S5A1E	Core i7-2610UE 1.5 GHz	4MB	QM67	non-ECC	18/24-bit	Yes	3	1	1	Yes	1	7	8	2 x SATAIII 2 x SATAII	Yes	Yes	Yes	Active	-20 ~ 80° C
SOM-5890Z2-S5A1E	Core i7-2610UE 1.5 GHz	4MB	QM67	non-ECC	18/24-bit	Yes	3	1	1	Yes	1	7	8	2 x SATAIII 2 x SATAII	Yes	Yes	Yes	Active	-40 ~ 85° C

Note: Passive = fanless; Active = with fan

Development Board

Part No.	Description
SOM-DB5800-00A1E	Development Board for COM-Express Type 6

Optional Accessories

Part No.	Description
1960048820N001	Semi-Cooler 125x95x33.5mm with 12V Fan

Packing List

Part No.	Description	Quantity
-	SOM-5890 CPU Module	1
1960052233N001	Heatspreader for Core i7/i5/i3 sku	1
1960052233N011	Heatspreader for Celeron sku	1