ARK-3440

Intel® Core™ i3/i5/i7 Processor with PCI/PCIe Expansion and Dual SATA HDDs

Windows Embedded

Features

- Intel® Core™ i3/i5/i7 fanless embedded IPC
- Multi-display and support for wide screen with high resolution
- Supports 2 GbE, eSATA, 6 USB 2.0, audio and 3 COM ports
- Two internal 2.5" SATA HDD drive bays
- Various expansion interfaces for diverse applications
- Easy integration, easy maintenance, and wide input voltage range
- IP40

Specifications

Processor System	CPU	Intel Core i7 SV up to 2.53 GHz / Intel Core i5 SV 2.4 GHz / Intel Core i3 SV up to 2.13 GHz
	System Chipset	Intel QM57 chipset
	BIOS	AMI 64 MB SPI BIOS
Memory	Technology	DDR3 1066/1333 MHz
	Max. Capacity	4 GB
	Socket	2 x 204-pin SODIMM
Graphics	Chipset	Integrated graphics built in Intel QM57
	Interface	CRT Interface (Optional by cable) DVI Interface, compliant with DVI 1.0 HDMI 1.3 24-bit LVDS interface(Optional)
Ethernet	LAN 1	10/100/1000 Mbps Ethernet controller, support Wake On LAN
	LAN 2	10/100/1000 Mbps Ethernet controller, support Wake On LAN
Audio	Amplifier	Dual output 2.2 W amplifier
	Interface	Spkr-out, Mic-in, Line-in
IO interface	Serial Interface	2 x RS232, 1 x RS232/422/485 (w/ auto flow control)
	USB Interface	6 x USB ports, compliant with USB 2.0
	Parallel Port	Supports D-sub 25-pin connector (optional)
	Digital I/O	Support 16-bit digital IO (optional)
Other	Thermal alarm	Yellow LED lighting
	Watchdog timer	255-level timer interval, setup by software
Expansion	ISA/PCI/PCIe Slot	1 Slot PCI and 1 Slot PCIe x1 (default); 2 Slots PCIe x1 (optional); 2 Slots PCI (optional) ; 1 Slot PCI and 1 Slot PCIe x4 (optional) Supports maximum dimension of 167 mm (width) x 106 mm (length) for expansion PC board
	Mini PCI/Mini PCIe	2 x Mini PCIe
Storage	HDD	Supports drive bay space for 2 x SATA 2.5" HDD (9.5 mm height only)
	SSD	Supports CompactFlash socket for type I/II CompactFlash disk
Software Support	Microsoft Windows	Windows 7, XP Professional, XP Embedded
	Linux	Fedora 9
Power Requirement	Power Type	AT/ATX
	Power Input Voltage	9 V_{DC} ~ 34 V_{DC}
	Minimum Power Input	DC 9-34V @ 6.0-1.5A
	Power Adapter	AC to DC, DC19V/7.89A, 150W (Optional)
Power Consumption	Typical	38 W (with is Intel @ Core i7-610E at 2.53 GHz and w/o expansion)
	Max.	47.94 W (with is Intel @ Core i7-610E at 2.53 GHz and w/o expansion)
Mechanical	Construction	Aluminum housing
	Mounting	Desk/wall-mounting
	Dimensions (W x H x D)	220 mm x 102.5 mm x 200 mm (8.66" x 4.04" x 7.87")
	Weight	4 kg (8.8 lb)
Environment	Operating Temperature	With extend temperature peripherals CompactFlash disk: 0 ~ 50° C with extend temperature peripherals 2.5-inch hard disk 0° to 45°C, with air flow
	Storage Temperature	-40 ~ 85° C (-40~185°F)
	Relative Humidity	95% @ 40° C (non-condensing)
	Vibration Loading During Operation	With CompactFlash disk: 5 Grms, IEC 60068-2-64, random, 5 ~ 500 Hz, 1 Oct./min, 1 hr/axis. With 2.5-inch hard disk: 1 Grms, IEC 60068-2-64, random, 5 ~ 500 Hz, 1 Oct./min, 1 hr/axis.
	Shock During Operation	With CompactFlash disk: 50 G, IEC 60068-2-27, half sine, 11 ms duration With hard disk: 20 G, IEC 60068-2-27, half sine, 11 ms duration
	EMC	CE/FCC Class A, CCC, BSMI
	Safety Certifications	UL, CCC, BSMI

All product specifications are subject to change without notice

Last updated : 25-Apr-2011

Dimensions

Unit: mm (inch)

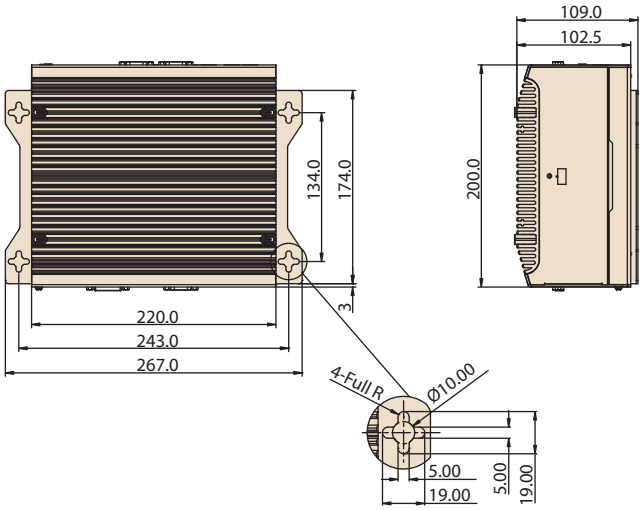

Front Panel External I/O Mechanical Layout/Drawing

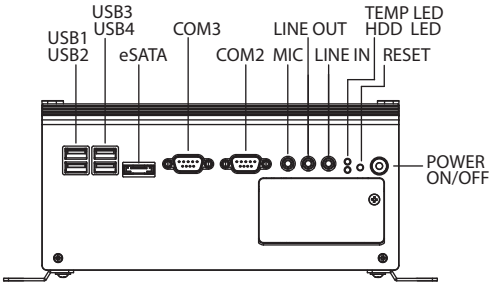

ARK-3440F

Rear Panel External I/O Mechanical Layout/Drawing

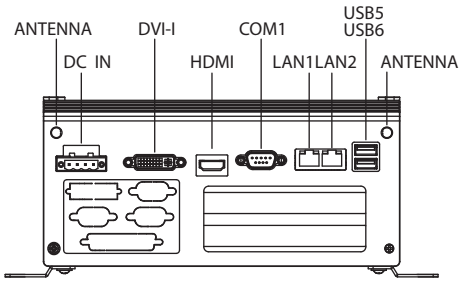

ARK-3440F

Packing List

Part Number	Description
-	1 x ARK-3440 Unit
-	1 x Driver/Utility CD/Manual
1960014487T00C	2 x desk/wall mount plate
1652003234	1 x 4-pin Phoenix DC power connector
1654000446	1 x DVI-I to CRT connector

Ordering Information

Part Number	Description
ARK-3440F-U5A1E	Intel Core i7 compact embedded box IPC
ARK-3440F-U4A1E	Intel Core i5 compact embedded box IPC
ARK-3440F-U1A1E	Intel Core i3 compact embedded box IPC

Optional Items

Part Number	Description
1757002161	AC-to-DC adapter, DC19 V/7.89A 150 W, with phoenix power plug, 0 ~ 40° C for home and office Use
1702002600	Power cable 3-pin 180 cm, USA type
1700004713	CABLE DVI-I to DVI-D and CRT
1700018187	LPT cable 2 x 130-2.0/D-SUB 25P(F) 20 cm for ARK-3440
1700009407	DIO cable 1*8P-2.54/2*10P-1.25 10 cm for ARK-3440
1700008871	COM Cable D-SUB 9P(M)/IDE#2 10P-2.0 20 cm
AMO-R010E	2 slot riser card, 1 x PCIe x1 + 1 x PCI
AMO-R009E	2 slot riser card, 2 x PCIe x1
AMO-R013E	2 slot riser card, 2 x PCI
AMO-R014E	2 slot riser card, 1 x PCI + 1 x PCIe x4 (customized BIOS required)

Embedded OS

Part Number	Description
2070009811	WES2009 ARK-3440 ENG_FRE_GER_ITA_SPA
2070009812	WES2009 ARK-3440 ENG_CHT_CHS_JPN