POC-S155

Slim Point-of-Care Terminal with 15" TFT LCD



Features

- 15" LCD display
- Fanless design with low audible noise
- Isolated design provides unique electric leakage protection for COM ports and LAN ports
- IPX1 water resistant enclosure with additional IP65 dust-tight front panel
- UL60601-1/EN60601-1, CE & FCC Class B certified
- Optional 802.11b/g WLAN module, touchscreen, 4400 mAh Li-ion battery pack

Specifications

Computing System	Chipset	855GME GMCH/ICH4 Chipset
	CPU	Intel Pentium M processor ULV 1.4 GHz / Celeron M processor 1.0 GHz
	Front Side Bus	400 MHz
	Memory	2 x 184-pin DIMM sockets, supports up to 2 GB DDR200/266/333 SDRAM
Graphics	Controller	Intel 855GME integrated
	VRAM	Dynamically shared system memory up to 64 MB
Expansion Slot	Mini PCI	1 x Mini PCI slot, supports type IIIA Mini PCI
Storage	HDD	1 x 2.5" IDE
	CompactFlash	1 x Type I/II x 1
Ethernet	Interface	1 x 10/100Base-T Ethernet interface (RJ-45)
I/O Ports		1 x RS-232 and 1 x RS-232/422/485 (isolated) serial port; 2 x USB ports; 1 x PS/2 mouse and K/B; 1 x D-sub VGA port
Speakers		2 x 1 W speakers; 1 x MIC-in and Speaker-out
Display	Display type	15" TFT color LCD
	Max. Resolution	1024 x 768
	Max. Colors	262K (6 bits/color)
	Dot size (mm)	0.297 x 0.297
	Viewing angle	120°
	Luminance	350 cd/m^2
	Contrast ratio	500:1
	LCD MTBF	50,000 hours
	Backlight lifetime	50,000 hours at 6.5 mA
Optional Touchscreen	Type	Analog Resistive
	Light transmission	75%
	Controller	RS-232 interface (use COM4)
	Durability	30 million touches
Power Supply		External universal AC/DC Adapter (SINPRO Model No. MPU50-108)
	Input voltage	100 ~ 240 V AC, 47 ~ 63 Hz, 1.35 A max.
	Output voltage	24 V DC, 2.08 A max. (50 watt)
Environment	Temperature	0 ~ 40° C
	Humidity	10 ~ 95% @ 40° C (non-condensing)
	Shock Resistance	20 G peak acceleration (11ms duration)
	Water/dust Resistance	IPX1 for whole system
Physical Characteristics	Dimensions (W x H x D)	418 x 342 x 84 mm (16.46" x 13.46" x 3.4")
	Weight (with battery)	6 Kg (13.23 lb)
	Power Supply	Input: 10.8 ~ 26.4 V DC, 1.5 A max. @ 24 V DC. (w/o battery)

All product specifications are subject to change without notice

Dimensions

Unit: mm

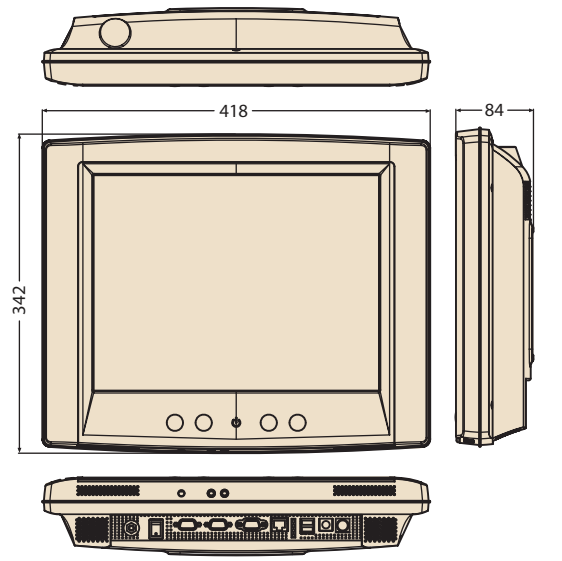

Mounting

Unit: mm

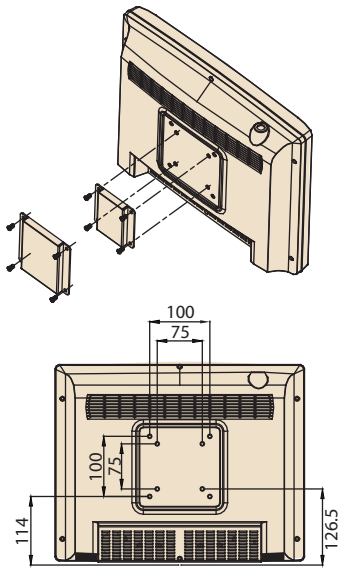

VESA: 75 x 75 mm ; 100 x 100 mm

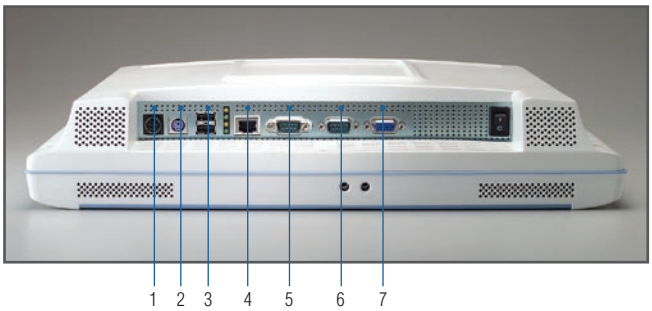

1. 4-pin mini-DIN DC connector
2. PS/2 Mouse/Keyboard Port
3. USB 2.0 Ports x 2
4. 10/100Base-T Ethernet interface (RJ-45)
5. Isolated RS-232/422/485 COM port (COM1)
6. RS-232 COM port (COM2)
7. D-sub VGA port

Ordering Information

Part Number	Touch Panel	HDD 24 x 7	RAM
POC-S155-140-BTE	Res.TS	-	-
POC-S155-140-BE	-	-	-
POC-S155-100-BTE	Res.TS	-	-
POC-S155-100-BE	-	-	-
POC-S155-PTE	Res.TS	80 G IDE	1 G

Packing List

Description	Quantity
PS/2 keyboard & mouse splitter cable	1
Startup manual	1
M4 x 20 screw set for VESA mounting	4
AC 50W SPS MPU50-108 W/PFC 100-240V	1
CD-ROM for POC-S155 Driver & Utility V1.0	1
HDD Frame	1
2.5" HDD mounting bracket	1
Fix bracket for HDD mounting bracket	2
Rubber Cushion for HDD anti-vibration	8
M3 x 4 screw set to mount HDD bracket	8
Advantech 2-year warranty card	1

Accessories

Part Number	Description
1760000372	4400 mAh Li-ion battery pack
1702002600	Power Cable (USA) 1.83M
1702002605	Power Cable (Europe) 1.8M
*	802.11b/g wireless LAN mini-PCI module & external antenna

*means this accessory will go with T Part Number. Please contact Advantech sales for more details.