H264-cPCI8

8 Channel H.264 Codec for CompactPCI

Advanced Micro Peripherals
THE EMBEDDED VIDEO EXPERTS

The H264-cPCI8 Encoder board is an eight channel H.264 codec for CompactPCI systems. The H.264-cPCI8 provides a powerful and flexible solution for capturing and compressing up to 8 analog video inputs at full size and at full frame rate to the H.264 / MPEG-4 AVC (Part 10) compression standard.

The H264-cPCI8 not only provides H.264 compression but can also simultaneously decompress and replay recordings from storage to display

The H264-cPCI8 allows high quality real-time video and audio capture and compression from NTSC/PAL video sources to disk and simultaneously provides an additional path for uncompressed video for on-screen preview or optional downstream video analytics.

The high performance H.264 video data compression and efficient bus utilization allow multiple H264-cPCI8 cards to be fitted in a compactPCI for multi-channel video recording and streaming applications.

Real-time,

8-Channel,

Full size,

Full framerate,

H.264 encode of

PAL/NTSC/RS-170

PRELIMINARY INFORMATION (Rev A.00)
Subject to change without notification

Advanced Micro Peripherals Ltd
Cambridge, CB6 2HY, England
Tel (+44) 1353 659500
Fax (+44) 1353 659600
sales@ampltd.com
http://www.ampltd.com

Advanced Micro Peripherals Inc
New York, NY10001, USA
Tel (+1) 212 951 7205
Fax (+1) 212 951 7206
sales@amp-usa.com
http://www.amp-usa.com

Windows® Embedded Partner

EMBEDDED-PC PC/104 MODULES

H264-cPCI8

8 Channel H.264 Codec for CompactPCI

Advanced Micro Peripherals
THE EMBEDDED VIDEO EXPERTS

Multi-camera

video encoding

and streaming

Applications

Vehicle cameras

Law Enforcement

Asset Monitoring

Remote video surveillance

Electronic news gathering

Multi-camera systems

Video acquisition and analysis

Traffic monitoring and control

Solid-state digital video recorder

Intranet/Internet video streaming

Advanced Micro Peripherals Ltd
Cambridge, CB6 2HY, England
Tel (+44) 1353 659500
Fax (+44) 1353 659600
sales@ampltd.com
http://www.ampltd.com

Advanced Micro Peripherals Inc
New York, NY10001, USA
Tel (+1) 212 951 7205
Fax (+1) 212 951 7206
sales@amp-usa.com
http://www.amp-usa.com

Windows® Embedded Partner

EMBEDDED-PC PC/104 MODULES

H264-cPCI8

8 Channel H.264 Codec for CompactPCI

Advanced Micro Peripherals
THE EMBEDDED VIDEO EXPERTS

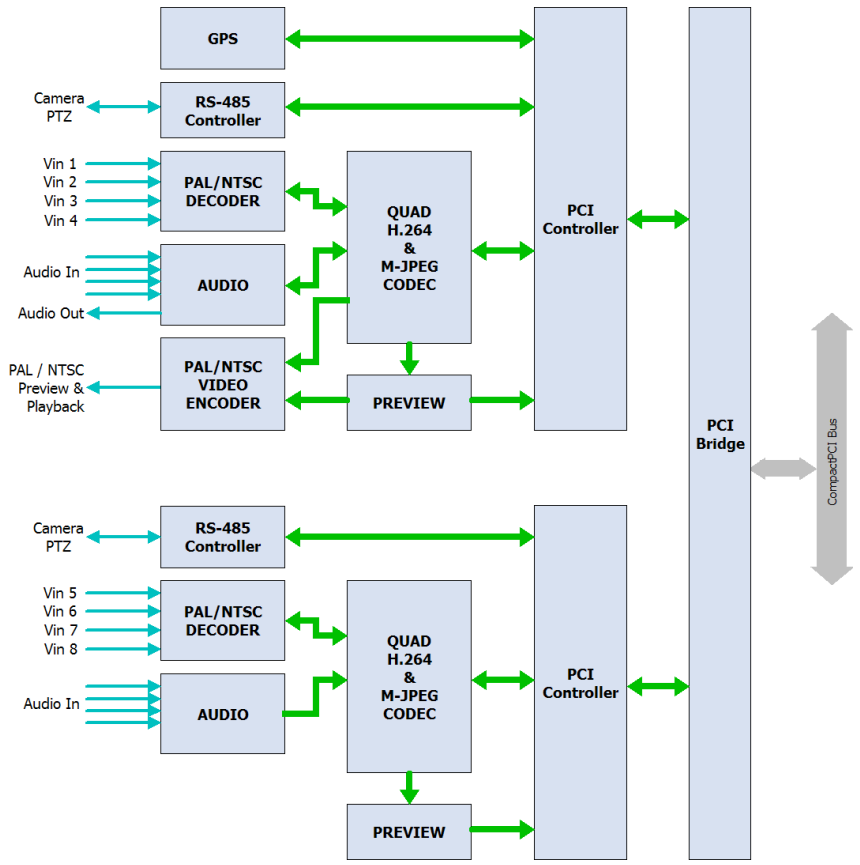

H264-cPCI8 Block Diagram

Text and graphics overlay

GPS timestamping (option)

Features

8 channels analog SD composite video inputs

Real-time 8x H.264 full frame rate, full size (4QCIF) encode

H.264/MPEG-4 AVC (Part 10) encoder / decoder

Medium Latency encoder (down to 100ms)

Fast text overlay on recording for Time/Date stamp etc.

GPS for universal time-stamping (option)

Multiple H264-cPCI8 boards per system

3U CompactPCI form factor

Drivers for Win-XP-E, Linux

Advanced Micro Peripherals Ltd
Cambridge, CB6 2HY, England
Tel (+44) 1353 659500
Fax (+44) 1353 659600
sales@ampltd.com
http://www.ampltd.com

Advanced Micro Peripherals Inc
New York, NY10001, USA
Tel (+1) 212 951 7205
Fax (+1) 212 951 7206
sales@amp-usa.com
http://www.amp-usa.com

Windows® Embedded Partner

EMBEDDED-PC PC/104 MODULES

H264-cPCI8

Rev A.00

8 Channel H.264 Codec for CompactPCI

Technical Specification

CompactPCI Bus Interface

CompactPCI® Core Specification PICMG-2.0 Rev 3.0
32-bit bus width, 33.33 MHz bus speed
Peripheral slot

Video Input ports

8 independent composite NTSC or PAL input channels
10-bit Analog-to-Digital converters
Anti-aliasing filters on inputs

Video Input Standards

Standard CCIR601-NTSC, CCIR-PAL
NTSC-M, NTSC-N, NTSC-J, NTSC (4.43), RS-170
PAL-B,G,N, PAL-D, PAL-H, PAL-I, PAL-M, PAL-NC, PAL-60

Video Input Adjustments

Contrast (luma gain) adjustable from 0 - 200% of original
Saturation (chroma gain) adjustable from 0 - 200% of original
Hue (chroma phase) adjustable from –180° to +180°
Brightness (luma level) can be adjusted from –25 to +25 IRE
Software adjustable Sharpness, Gamma and noise suppression

Audio Input

8x mono input
Provides Audio/Video Synchronisation

Video Encoding

ITU-T H.264 (ISO/IEC 14496-10, Baseline profile, level 3)
M-JPEG Video Encoding (optional)
8 channel NTSC 4CIF (704 x 480) at 30fps per channel
8 channel PAL 4CIF (704 x 576) at 25fps per channel
Supports I and P Frame Compression
Supports Variable Bit Rate (VBR)
Supports Constant Bit Rate (CBR)
Approximate 100ms encode Latency

Audio Encoding

G.723 Audio Codec

Video Decoding / Playback

Real-time H.264 Video Decoding
Playback to Composite PAL/NTSC output (optional)

Audio Decoding

Mono audio output

Uncompressed Video Path

Real-time Preview to host VGA display
Optional Preview to Composite PAL/NTSC output

Motion Detection

330 (NTSC) or 396 (PAL) detection blocks
Masking of areas not required for motion detection
Adjustable sensitivity

System Requirements

x86 PC-Compatible CompactPCI Host Computer
PCI or AGP Display (if Video Preview to host is required)
3.3V and 5V from CompactPCI backplane

Mechanical

Standard 3U CompactPCI form factor
Optional 6U CompactPCI faceplate and mounting

Operational characteristics

Operating temperature 0˚C to 60˚C
Extended temperature -40˚C to +85˚C (option)

Software

Drivers for Windows-XP, Linux
Comprehensive video recording SDK
Sample video recording application in C/C++ source code

Related Products

H264cPCI -VStream RTSP Video Streaming SDK

Ordering Information

H264-cPCI8 Video Encoder (0 to 60˚C)
H264-cPCI8-Ext Video Codec (-40˚C to +85˚C)

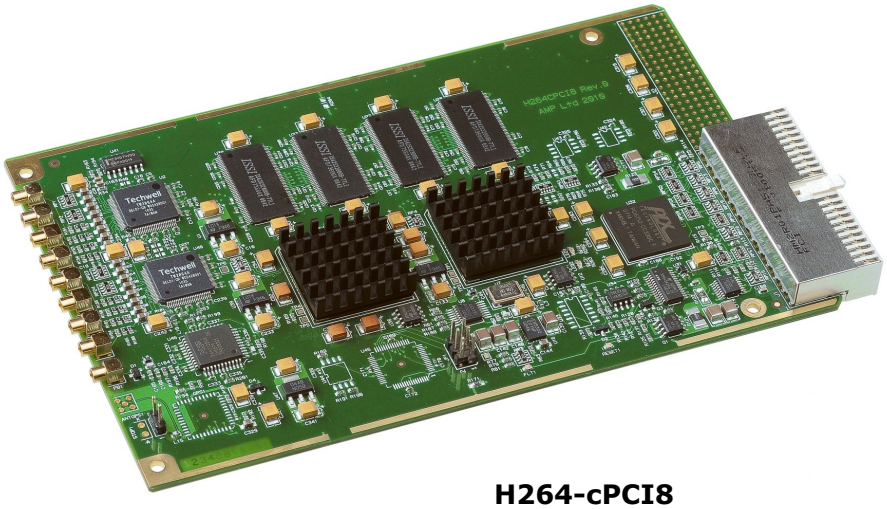

H264-cPCI8

Advanced Micro Peripherals Ltd
Cambridge, CB6 2HY, England
Tel (+44) 1353 659500
Fax (+44) 1353 659600
sales@ampltd.com
http://www.ampltd.com

Advanced Micro Peripherals Inc
New York, NY10001, USA
Tel (+1) 212 951 7205
Fax (+1) 212 951 7206
sales@amp-usa.com
http://www.amp-usa.com

Advanced Micro Peripherals
THE EMBEDDED VIDEO EXPERTS