HDCorder-SDI

CompactPCI-Serial HD-SDI H.264 Video Encoder

Advanced Micro Peripherals
THE EMBEDDED VIDEO EXPERTS

The HDCorder-SDI is an intelligent high definition video recording solution that accepts a HD-SDI input at up to 1080p60 and encodes it to the H.264 video encoding standard. The CompactPCI-Serial board solution is ideal for demanding applications in Military, Communications, Transportation, mining and Energy industries.

In addition to capturing video and stereo audio data the HDCorder-SDI supports extraction of KLV (MISB 0605.3 compliant) embedded data contained within the HD-SDI signal. The video, audio and metadata are synchronized and transferred to the host system over the CompactPCI-Serial bus. An SDI monitor output is provided

The HDCorder-SDI also features optional on-board redundant storage to compliment the host system storage and improve data integrity. This on-board cache acts as a rolling buffer, storing the most recently recorded data. This storage redundancy ensures no mission data is lost even when starved of host CPU attention in heavily loaded system configurations.

The HDCorder-SDI is a standard 3U CompactPCI-serial module and supported for Linux and Windows.

Aerial

Surveillance,

Mission

Recording

&

Border

Protection

Rev A.01- Preliminary Information
Subject to change without notification

Advanced Micro Peripherals Ltd
Cambridge, CB6 2HY, England
Tel (+44) 1353 659500
Fax (+44) 1353 659600
sales@ampltd.com
http://www.ampltd.com

Advanced Micro Peripherals Inc
New York, NY10016, USA
Tel (+1) 212 951 7205
Fax (+1) 212 951 7206
sales@amp-usa.com
http://www.amp-usa.com

Windows® Embedded Partner

EMBEDDED-PC PC/104 MODULES

HDCorder-SDI

CompactPCI-Serial HD-SDI H.264 Video Encoder

Advanced Micro Peripherals
THE EMBEDDED VIDEO EXPERTS

Real-time

transmission of

High quality video,

Audio,

and

Synchronized

metadata

Applications

Unmanned vehicles (UAV, ROV)

Mission Recorder

Rugged video recorders for marine, aviation

Situational Awareness

Remote Video Surveillance

Border Security

Traffic Monitoring and Control

Video Acquisition and Analytics

Solid state multi-channel video and sensor recorders

Advanced Micro Peripherals Ltd
Cambridge, CB6 2HY, England
Tel (+44) 1353 659500
Fax (+44) 1353 659600
sales@ampltd.com
http://www.ampltd.com

Advanced Micro Peripherals Inc
New York, NY10016, USA
Tel (+1) 212 951 7205
Fax (+1) 212 951 7206
sales@amp-usa.com
http://www.amp-usa.com

Windows® Embedded Partner

EMBEDDED-PC PC/104 MODULES

HDCorder-SDI

CompactPCI-Serial HD-SDI H.264 Video Encoder

Advanced Micro Peripherals
THE EMBEDDED VIDEO EXPERTS

HDCorder-SDI

Ideally suited to the demanding applications, space requirements and environmental conditions of Military, Transportation, Mining and Energy Industries

Features

1x HD-SDI input up to 1080p60

Real-time HD H.264 encode at 1080p60

Stereo audio capture from HD-SDI

KLV Metadata capture from HD-SDI

HD-SDI monitor output

Optional onboard redundant storage (up to 16GBytes)

Standard 3U CompactPCI-Serial mechanical form factor

Advanced Micro Peripherals Ltd
Cambridge, CB6 2HY, England
Tel (+44) 1353 659500
Fax (+44) 1353 659600
sales@ampltd.com
http://www.ampltd.com

Advanced Micro Peripherals Inc
New York, NY10016, USA
Tel (+1) 212 951 7205
Fax (+1) 212 951 7206
sales@amp-usa.com
http://www.amp-usa.com

Windows® Embedded Partner

EMBEDDED-PC PC/104 MODULES

HDCorder-SDI

Rev A.00

CompactPCI-Serial HD-SDI H.264 Video Encoder

Technical Specification

HD-SDI Video Input

Flexible capture at up to 1080p60
HD-SDI monitor output

Audio Input

Embedded audio captured from HD-SDI input
Provides audio/video synchronisation

KLV Metadata

Embedded KLV metadata captured from HD-SDI input
MSB 0605.3 compliant
Synchronised with video/audio

H.264 Video Encoding

ITU-T H.264 (ISO/IEC 14496-10), supported profiles:
- Baseline profile,
- Main profile (I,P frame coding only)
- High profile (I, P frame coding only) at level 4.1

Up to 1080p60 encode
CAVLC and CABAC coding
Supports Variable Bit Rate (VBR)
Supports Constant Bit Rate (CBR)

JPEG Encoder

JPEG (ISO/IEC 10918-1)
Baseline JPEG with JFIF support

Additional Features

On-board redundant storage (option)

Mechanical

Standard 3U CompactPCI-Serial form factor.
Operating temp 0˚C to 60˚C
Operating temp –40˚C to +85˚C (extended temp option)

Ordering Information

HDCORDER-SDI
H.264 HD Video Streamer (0 to 60˚C)
HDCORDER--SDI-EXT
H.264 HD Video Streamer (-40˚C to +85˚C)

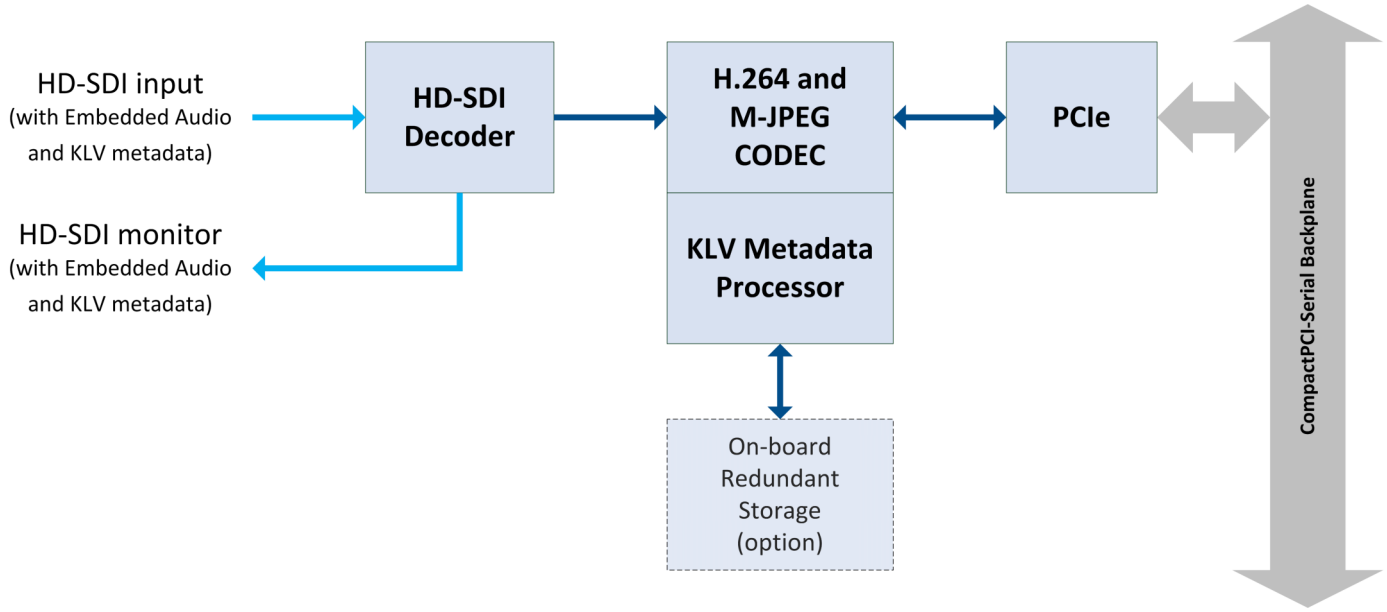

HDCorder-SDI Functional Diagram

Advanced Micro Peripherals Ltd
Cambridge, CB6 2HY, England
Tel (+44) 1353 659500
Fax (+44) 1353 659600
sales@ampltd.com
http://www.ampltd.com

Advanced Micro Peripherals Inc
New York, NY10016, USA
Tel (+1) 212 951 7205
Fax (+1) 212 951 7206
sales@amp-usa.com
http://www.amp-usa.com

Advanced Micro Peripherals
THE EMBEDDED VIDEO EXPERTS