PIS-5500

High Performance Graphics Processing Fanless PC with Intel® Core™ i7 Processor and NVIDIA GPU

Features

- 6th/7th Gen Intel® Core™ i7 Processor
- 8x M12 GbE (4x support PoE), 4x RS-422, 4x USB 3.0, 1x DVI-I, 4x DisplayPort with lockable connectors
- Supports MXM 3.1 Type A/B module on PCI Express x16
- Rich Storage Options: 2x 2.5" SATA 6.0 Gb/s drive bays, 1x M.2 2280 slot, 1x CFast socket
- GNSS/3G/4G/WLAN support via 2x mPCIe slots and 2x USIM slots
- MVB/CAN bus support by Mini PCI Express add-on module
- Nominal Voltage: 24VDC, 36VDC, 72VDC and 110VDC (EN50155 compliant)

New

Specifications

System

Processor

6th/7th Gen Intel® Core™ i7 processors (formerly Skylake and Kaby Lake)
Intel® Core™ i7-6820EQ CPU, 2.80GHz
Intel® Core™ i7-7820EQ CPU, 3.0GHz

Memory

Dual channel DDR4-2133 SDRAM with dual SODIMM sockets, up to 32GB

BIOS

AMI UEFI

Storage

Up to 4x 2.5" SATA drive bays
(two for PIS-5500 series, four for PIS-5510 series)
1x CFast slot, externally accessible
1x M.2 2280 (SATA)

Graphics

2x DisplayPort from Intel processor
4x DisplayPort with lockable design from GPU MXM (SKU dependent)
1x DVI-I from Intel processor

Connectivity

Ethernet

2x RJ-45 1000BASE-T Ethernet ports
4x M12 X-code 1000BASE-T Ethernet ports with PoE Class 2 (7W), 1.5kV isolation
4x M12 A-coded 1000BASE-T Ethernet ports, 1.5kV isolation

USB

4x USB 3.0 Type A ports
Additional 2x M12 USB ports in PIS-5510 series

Serial Port

4x DB-9 RS-232/422/485 ports (RS-422 by default)
2kVrms isolation

Audio

Mic-in/ Line-out ports

CAN/MVB

Supported by Mini PCIe card with two DB-9 outputs

Wireless

2x Mini PCIe card slots are available for cellular modem or WLAN modules
Compliant to Mini PCIe card spec v1.2 (PCIe and USB 2.0)
Each Mini PCIe slot supports one micro-SIM
4x RP-SMA antenna connector cutouts

In-system Expansion I/O

2x full size Mini PCI Express slots
2x USIM slots
1x Type A/B MXM slot on PCI Express x16 (P1000, P3000)
1x USB 2.0 wafer connector

External I/O

4x M12 GbE with PoE ports
4x M12 GbE ports
2x RJ-45 GbE ports
6x DisplayPorts
1x DVI-I port
4x USB 3.0 Type A ports
2x M12 USB 2.0 ports (in PIS-5510)
2x DB-9 connectors reserved for MVB or CAN Mini PCIe module
1x Mic-in port
1x Line-out port
Four antenna cutouts reserved
Reset button
Power button

Specifications

Miscellaneous

LEDs
1x diagonostics, 1x storage, 1x WDT, 3x user defined

Battery
Coin cell CR2032 (change to rechargeable golden cap by request)

Board Management
ADLINK SEMA 3.0:
- Watch Dog
- Hardware monitor
- Runtime statistics
- Failsafe dual BIOS

Power Supply
One 4-pin A-coded M12 connector
+24V/+36V/+72V/+110VDC nominal power input (16.8V to 137.5V, EN50155 compliant)

Power Consumption
149W on PIS-5500/6820/8G/P1000; 158W on PIS-5500/6820/8G/P3000 at
1. +24VDC in
2. CPU 100% loading
3. P1000 or P3000 100% loading

Mechanical

Dimension (WxDxH)
360mm x 225.1mm x 88.8mm (for PIS-5500)
360mm x 225.1mm x 105.4mm (for PIS-5510)

Weight
6.3 kg

Mounting
Wall mount

Environmental

Operating Temperature
Convection cooled
Class OT1: -25°C to 55°C with P3000 MXM module (supported by condition)
Class OT3: -25°C to 70°C with P1000 MXM module

Storage Temperature
-40°C to +85°C

Humidity
EN 50125-1, compliance EN 60068-2-78: 2012 Edition 2.0, Clause 4.2 at 40°C

Vibration
EN50155 standard, method EN61373: 2010, Category 1 Class B

Shock
EN50155 standard, method EN61373: 2010, Category 1 Class A & Class B

Safety
EN 50153
EN50124-1

Fire Protection
EN 45545-2:2013+A1:2015

EMC
EN 50121-3-2, EN50155

Operating System
Windows 8, Windows 10
Ubuntu 16.04

Ordering Information

- **PIS-5500/6820/16G**
  Fanless railway computer with Intel® Core™ i7-6820EQ and 16GB DDR4 and two SATA bays (conformal coating by request; external cables and power adapter are excluded)

- **PIS-5500/7820/32G/P3000**
  Fanless railway computer with Intel® Core™ i7-7820EQ and 32GB DDR4 with P3000 MXM module and two SATA bays (conformal coating by request; external cables and power adapter are excluded)
  *Please contact your sales representative for P3000 support condition.

- **PIS-5510/6820/16G/P1000**
  Fanless railway computer with Intel® Core™ i7-6820EQ and 16GB DDR4 with P1000 MXM module and four SATA bays (conformal coating by request; external cables and power adapter are excluded)

Optional Accessories

- **Factory-installed industrial grade SSD**
- **Mini PCIe card 3G/Wi-Fi/BT/GPS wireless kit**
- **Mini PCIe card CAN bus Kit**
- **Starter cable kit for PIS-5500**
  4x PoE M12(X) to RJ-45 cable, 4x Ethernet M12 A(M) to RJ-45(F) cable, 1x PS/2 KB/MS Y cable and 1x M12(S) to DC power cable
- **Starter cable kit for PIS-5510**
  4x PoE M12(X) to RJ-45 cable, 4x Ethernet M12 A(M) to RJ-45(F) cable, 2x M12(A) to USB 2.0 type A cable, 1x PS/2 KB/MS Y cable and 1x M12(S) to DC power cable

Dimensions

(Units: mm)

PIS-5500

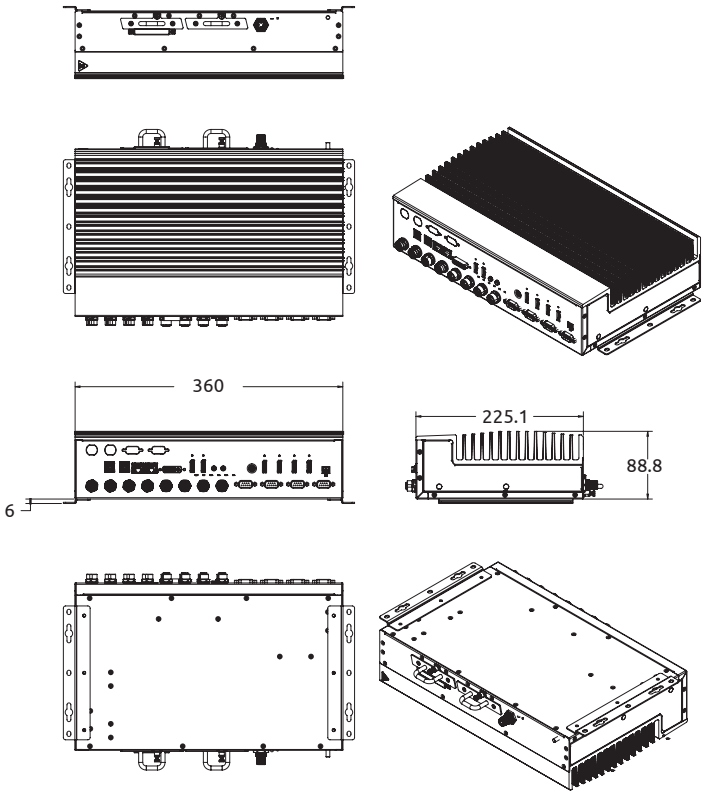

PIS-5510

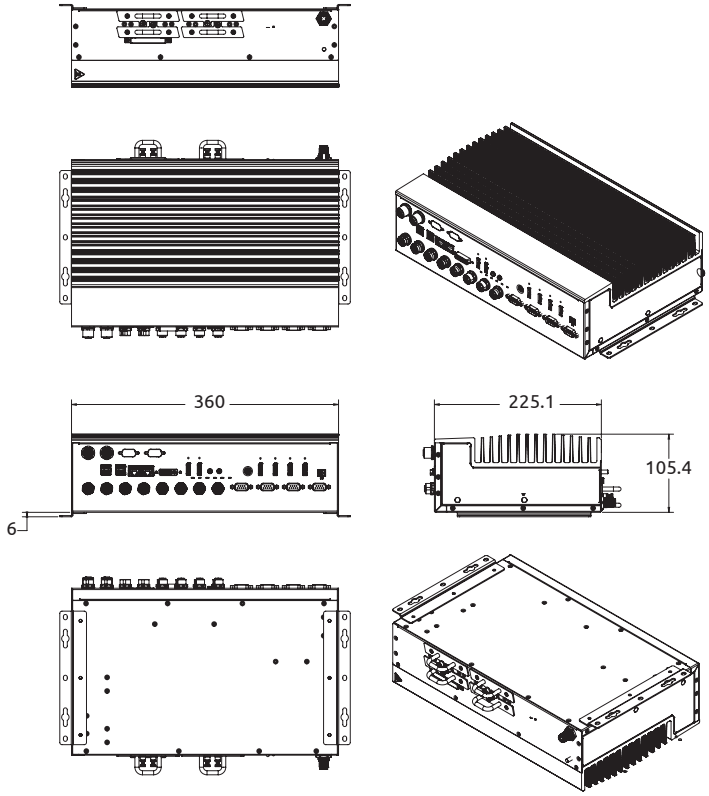

All products and company name listed are trademarks or trade names of their respective companies.
Updated May. 06, 2019. ©2019 ADLINK Technology, Inc. All Rights Reserved.
All specifications are subject to change without further notice.